SDPBC HOPE CENTENNIAL ELEMENTARY

5350 STACY ST., WEST PALM BEACH, FLORIDA 33417

PARKING IMPROVEMENT PLANS

FOR:

THE SCHOOL DISTRICT PALM BEACH COUNTY

PARCEL / FOLIO No.
00-42-43-26-02-000-0311

PROJECT LOCATION

TOWNSHIP 43S – RANGE 42E – SECTION 26

LOCATION MAP
N.T.S.

MILLER LEGG

South Florida Office: 13680 NW 5th Street, Suite 200
Sunrise, Florida · 33325
954-436-7000
www.millerlegg.com
Certificate of Authorization: LB6680

DISTRICT SCHOOL BOARD MEMBERS

DISTRICT 1	BARBARA McQUINN
DISTRICT 2	ALEXANDRIA AYALA
DISTRICT 3 (BOARD VICE CHAIR)	KAREN BRILL
DISTRICT 4	ERICA WHITFIELD
DISTRICT 5 (BOARD CHAIR)	FRANK A. BARBIERI, JR., ESQ.
DISTRICT 6	MARCIA ANDREWS
DISTRICT 7	EDWIN FERGUSON, ESQ.

LEGAL DESCRIPTION

LOT 31, HAVERHILL ACRES, ACCORDING TO THE PLAT THEREOF AS RECORDED IN PLAT BOOK 20, PAGE 75 OF THE PUBLIC RECORDS OF PALM BEACH COUNTY, FLORIDA.

SAID LANDS SITUATE, LYING, AND BEING IN THE PALM BEACH COUNTY, FLORIDA AND CONTAINING 75743 SQUARE FEET (1.739 ACRES) MORE OR LESS.

SPECIAL NOTE:
THIS PROPERTY IS SUBJECT TO AN EASEMENT OVER THE EAST 10 FEET PER WARRANTY DEED RECORDED IN OFFICIAL RECORDS BOOK 21515, PAGE 1593, P.B.C.R.

PROJECT DIRECTORY

OWNER/DEVELOPER:
SCHOOL DISTRICT OF PALM BEACH COUNTY
3661 INTERSTATE PARK ROAD N.
RIVIERA BEACH, FLORIDA 33404
TEL.: (561) 882–1983

CIVIL ENGINEER:
MILLER LEGG & ASSOCIATES
13680 NW 5TH STREET, SUITE 200
SUNRISE, FLORIDA 33325
TEL.: (954) 436–7000

SURVEYOR:
MILLER LEGG & ASSOCIATES
13680 NW 5TH STREET, SUITE 200
SUNRISE, FLORIDA 33325
TEL.: (954) 436–7000

LANDSCAPE ARCHITECT:
MILLER LEGG & ASSOCIATES
13680 NW 5TH STREET, SUITE 200
SUNRISE, FLORIDA 33325
TEL.: (954) 436–7000

AGENCY HAVING JURISDICTION:
SCHOOL DISTRICT OF WEST PALM BEACH
3661 INTERSTATE PARK ROAD N.
RIVIERA BEACH, FLORIDA 33404
TEL.: (561) 882–1983

COUNTY:
PALM BEACH COUNTY
301 N. OLIVE AVENUE
WEST PALM BEACH, FLORIDA 33401
TEL.: (561) 355–2040

SHEET INDEX

PETER J. PELLERITO, PE SHALL BE RESPONSIBLE FOR THE FOLLOWING C–SERIES SHEETS IN ACCORDANCE WITH RULE 61G15–23.004. F.A.C.

Sheet List Table

SHEET NUMBER	SHEET TITLE
C0.0	COVER SHEET
C1.0	GENERAL NOTES & SPECIFICATIONS
C1.1	CIVIL LEGEND, ABBREVIATIONS, & SYMBOLS
C2.0	SITE CLEARING & DEMOLITION PLAN
C3.0	SITE GEOMETRY, MARKING, & SIGNAGE PLAN
C3.1	GENERAL CONSTRUCTION DETAILS
C4.0	SITE PAVING, GRADING, & DRAINAGE PLAN
C4.1	TYPICAL CROSS SECTIONS
C4.2	DRAINAGE DETAILS
C5.0	STORMWATER POLLUTION PREVENTION PLAN
C5.1	STORMWATER POLLUTION PREVENTION DETAILS

Building Code Services

THIS DOCUMENT WAS REVIEWED FOR COMPLIANCE WITH ALL STATUTES, CODES, AND STANDARDS APPLICABLE TO PALM BEACH COUNTY SCHOOL DISTRICT FACILITIES.

THERE MAY BE ADDITIONAL CODE OR DISTRICT REQUIREMENTS NOT SHOWN ON THE PLANS. PLAN REVIEW DOES NOT RELIEVE THE BUILDER OR DESIGN PROFESSIONAL OF RECORD FROM FULL COMPLIANCE WITH ALL DISTRICT REQUIREMENTS AND APPLICABLE CODES.

BY: Rômulo Silva 01/20/2026

This item has been digitally signed and sealed by Peter J. Pellerito, P.E. on the date adjacent to the seal.

Printed copies of this document are not considered signed and sealed and the signature must be verified on any electronic copies.

PETER JOSEPH PELLERITO LICENSE No. 50063 STATE OF FLORIDA PROFESSIONAL ENGINEER

Digitally signed by Peter J. Pellerito
Date: 2025.11.14 13:34:49-05'00'

APPROVED : PETER J. PELLERITO, P.E.
F.L. REGISTRATION NO. 50063 DATE : 10/29/2025

SDPBC PROJECT NO. 0012-2402

24–00182 **SDPBC HOPE CENTENNIAL ELEMENTARY**

NO.	DATE	REVISIONS	DES.	DWN.

\\192.168.15.20\DATA\PROJECTS\2024\24-00182 – SDPBC HOPE CENTENNIAL\DRAWINGS\24-00182_CVR.DWG by PPELLERI 10/29/2025 1:01:23 PM

BCS Received 01/20/2026 ID 31952

GENERAL NOTES

GENERAL NOTES ON THE PROJECT PLANS AND DRAWINGS ARE SOLELY TO AID AND ASSIST THE CONTRACTOR WITH THE FIELD OPERATIONS FOR THE PROJECT. SAID GENERAL NOTES MAY NOT FULLY DESCRIBE ALL OF THE REQUIREMENTS FOR AN ITEM. THEREFORE, THE CONTRACTOR SHALL READ AND VERIFY THE CONTRACT DOCUMENTS, INCLUDING BUT NOT LIMITED TO THE PLANS, SPECIFICATIONS, GENERAL TERMS AND CONDITIONS, AND THE SUPPLEMENTAL TERMS AND CONDITIONS, TO FULLY UNDERSTAND AND COMPLY WITH ALL THE REQUIREMENTS THEREIN. THE LOCATION AND SIZE OF ALL EXISTING UTILITIES AND TOPOGRAPHY HAVE BEEN PREPARED FROM INFORMATION AVAILABLE TO THE ENGINEER. THIS INFORMATION IS NOT GUARANTEED AND IT IS THE CONTRACTOR'S RESPONSIBILITY TO DETERMINE THE EXACT LOCATION OF ANY EXISTING UTILITIES AND TOPOGRAPHY PRIOR TO CONSTRUCTION. THE CONTRACTOR SHALL VERIFY ALL UTILITIES, BY ELECTRONIC METHODS AND BY HAND EXCAVATION IN COORDINATION WITH ALL UTILITY COMPANIES, PRIOR TO BEGINNING ANY CONSTRUCTION OPERATIONS. THIS WORK BY THE CONTRACTOR SHALL BE CONSIDERED INCIDENTAL TO THE CONTRACT AND NO ADDITIONAL COMPENSATION SHALL BE ALLOWED.

1. APPLICABLE CODES
1.1. GENERAL
ALL CONSTRUCTION, MATERIALS AND TESTING SHALL CONFORM TO THE STANDARDS AND SPECIFICATIONS OF SCHOOL DISTRICT OF WEST PALM BEACH, PALM BEACH COUNTY, AND ALL OTHER LOCAL AND NATIONAL CODES WHERE APPLICABLE. WHEN ANY OF THE GOVERNING REGULATORY AGENCY'S STANDARDS ARE IN CONFLICT, THE MORE STRINGENT OF THE TWO SHALL APPLY.
1.2. CONSTRUCTION SAFETY
ALL CONSTRUCTION SHALL BE DONE IN CONFORMANCE WITH THE RULES AND REGULATIONS OF THE OCCUPATIONAL SAFETY AND HEALTH ADMINISTRATION (OSHA) AND THE MANUAL OF UNIFORM TRAFFIC CONTROL DEVICES (MUTCD).
1.3. TRENCH SAFETY ACT
CONTRACTOR SHALL BE SOLELY RESPONSIBLE FOR COMPLIANCE WITH THE STATE OF FLORIDA TRENCH SAFETY ACT.
1.4. SURVEY DATA
ALL ELEVATIONS ON THE PLANS OR REFERENCED IN THE SPECIFICATIONS UNLESS OTHERWISE NOTED, ARE BASED ON NORTH AMERICAN VERTICAL DATUM OF 1988 (NAVD 88').

2. PRECONSTRUCTION RESPONSIBILITIES AND NOTICES
2.1. THE CONTRACTOR SHALL OBTAIN A SUNSHINE STATE ONE CALL AT 811 CERTIFICATION NUMBER AT LEAST 48 HOURS PRIOR TO BEGINNING ANY EXCAVATION.
2.2. PRIOR TO BEGINNING CONSTRUCTION, THE CONTRACTOR SHALL VERIFY THE SIZE, LOCATION, ELEVATION, AND MATERIAL OF ALL EXISTING UTILITIES WITHIN THE AREA OF CONSTRUCTION.
2.3. EXISTING UTILITY LOCATIONS SHOWN ON THESE PLANS ARE APPROXIMATE. THE ENGINEER ASSUMES NO RESPONSIBILITY FOR THE ACCURACY OF EXISTING UTILITIES SHOWN OR FOR ANY EXISTING UTILITIES NOT SHOWN.
2.4. THE CONTRACTOR SHALL BE RESPONSIBLE FOR DAMAGE TO ANY EXISTING UTILITIES FOR WHICH HE FAILS TO REQUEST LOCATIONS FROM THE UTILITY OWNER. HE IS RESPONSIBLE AS WELL FOR DAMAGE TO ANY EXISTING UTILITIES WHICH ARE PROPERLY LOCATED.
2.5. CONTRACTOR SHALL OBTAIN AND KEEP COPIES OF ALL REQUIRED PERMITS ONSITE PRIOR TO COMMENCEMENT OF CONSTRUCTION. CONTRACTOR ASSUMES ALL RESPONSIBILITY FOR WORK PERFORMED WITHOUT PERMITS.
2.6. ADDITIONAL COORDINATION FOR UTILITY CONFLICTS, R.F.I.'S AND CONTRACT EXTENDED TIME BEYOND THE ORIGINAL SCOPE OF CONSTRUCTION DURATION (AFTER THE CONTRACTOR CONSTRUCTION NOTICE TO PROCEED) AND EXCLUDING DOCUMENTED WORKAGE STOP ORDERS ISSUED BY CLIENT TO CONTRACTOR AND CONSULTANT WILL BE BILLED TO THE CONTRACTOR VIA THE OWNER AT $135 PER HOUR.

3. INSPECTIONS
3.1. THE CONTRACTOR SHALL NOTIFY SCHOOL DISTRICT OF WEST PALM BEACH, THE ENGINEER OF RECORD AND PALM BEACH COUNTY, IF APPLICABLE, AT LEAST 48 HOURS PRIOR TO BEGINNING CONSTRUCTION AND PRIOR TO THE INSPECTION OF THE FOLLOWING ITEMS:
3.1.1. STORM DRAINAGE
3.1.2. SANITARY SEWER
3.1.3. WATER SYSTEM
3.1.4. SUBGRADE – SUBMIT AND HAVE APPROVED DENSITIES PRIOR TO PLACEMENT OF ROCK
3.1.5. LIMEROCK BASE – SUBMIT AND HAVE APPROVED DENSITIES AND AS–BUILTS PRIOR TO THE PLACEMENT OF ANY ASPHALT.
3.1.6. ASPHALTIC CONCRETE
3.1.7. FINAL INSPECTION
3.2. ALL INSPECTIONS SHALL BE MADE BY SCHOOL DISTRICT OF WEST PALM BEACH. THE ENGINEER OF RECORD WILL PROVIDE GENERAL CONSTRUCTION OBSERVATION SERVICES.

4. SHOP DRAWINGS
4.1. PRIOR TO THEIR CONSTRUCTION OR INSTALLATION, SHOP DRAWINGS SHALL BE SUBMITTED TO AND REVIEWED BY SCHOOL DISTRICT OF WEST PALM BEACH AND ENGINEER OF RECORD FOR SANITARY MANHOLES, CATCH BASINS, FIRE HYDRANTS, VALVES AND OTHER MECHANICAL/ELECTRICAL EQUIPMENT WITH ASSOCIATED STRUCTURES, INCLUDING ALL DATA, CATALOGUE LITERATURE SHALL BE SUBMITTED FOR WATER AND SEWER PIPES, FITTINGS, AND APPURTENANCES.
4.2. PRIOR TO SUBMITTING SHOP DRAWINGS TO THE ENGINEER, THE CONTRACTOR SHALL REVIEW AND APPROVE THE DRAWINGS, AND SHALL NOTE IN RED ANY DEVIATIONS FROM THE ENGINEERS' PLANS OR SPECIFICATIONS.
4.3. INDIVIDUAL SHOP DRAWINGS FOR ALL PRECAST STRUCTURES ARE REQUIRED. CATALOGUE LITERATURE WILL NOT BE ACCEPTED FOR PRECAST STRUCTURES.

5. TEMPORARY FACILITIES
5.1. TEMPORARY UTILITIES
IT SHALL BE THE CONTRACTOR'S RESPONSIBILITY TO ARRANGE FOR OR SUPPLY TEMPORARY WATER SERVICE, SANITARY FACILITIES AND ELECTRICITY TO HIS EMPLOYEES AND SUBCONTRACTORS FOR THEIR USE DURING CONSTRUCTION.
5.2. TRAFFIC REGULATION
5.2.1. MAINTENANCE OF TRAFFIC IN THE PUBLIC RIGHT–OF–WAY SHALL BE IN ACCORDANCE WITH THE MUTCD.
5.2.2. ALL OPEN TRENCHES AND HOLES ADJACENT TO ROADWAYS OR WALKWAYS SHALL BE PROPERLY MARKED AND BARRICADED TO ASSURE THE SAFETY OF BOTH VEHICULAR AND PEDESTRIAN TRAFFIC.
5.2.3. NO TRENCHES OR HOLES NEAR WALKWAYS OR IN ROADWAYS OR THEIR SHOULDERS ARE TO BE LEFT OPEN DURING NIGHTTIME HOURS WITHOUT EXPRESS PERMISSION OF THE ENGINEER, SCHOOL DISTRICT OF WEST PALM BEACH AND LOCAL OR PALM BEACH COUNTY AUTHORITY.
5.2.4. ALL CONSTRUCTION WITHIN FDOT RIGHT–OF–WAYS MUST CONFORM WITH FDOT SPECIFICATIONS, STANDARDS AND PERMIT REQUIREMENTS. NO WORK SHALL COMMENCE WITHIN FDOT RIGHT–OF–WAYS WITHOUT AN FDOT PERMIT. FULL LANE WIDTH RESTORATION TO MATCH EXISTING PAVEMENT SECTION IS REQUIRED IN ACCORDANCE WITH STANDARDS FOR PROPOSED WORK WITHIN FDOT RIGHT–OF–WAYS.
5.2.5. CONTRACTOR SHALL PREPARE AND SUBMIT MAINTENANCE OF TRAFFIC PLAN (MOT) WHERE REQUIRED BY FEDERAL, STATE, COUNTY OR LOCAL AGENCIES HAVING JURISDICTION. CONTRACTOR SHALL OBTAIN ALL REQUIRED APPROVALS AND PERMITS ASSOCIATED WITH THE MOT'S. ALL MOT'S ARE TO BE AMERICAN TRAFFIC SAFETY SERVICES ASSOCIATION CERTIFIED.

6. PROJECT CLOSEOUT
6.1. CLEANING OUT
6.1.1. DURING CONSTRUCTION, THE PROJECT SITE AND ALL ADJACENT AREAS SHALL BE MAINTAINED IN A NEAT AND CLEAN MANNER. UPON FINAL CLEAN UP, THE PROJECT SITE SHALL BE LEFT CLEAR OF ALL SURPLUS MATERIAL OR TRASH. THE PAVED AREAS SHALL BE SWEPT BROOM CLEAN AS DIRECTED BY THE ENGINEER.
6.1.2. THE CONTRACTOR SHALL RESTORE OR REPLACE, WHEN AND AS DIRECTED BY THE ENGINEER OR SCHOOL DISTRICT OF WEST PALM BEACH, ANY PUBLIC OR PRIVATE PROPERTY DAMAGED BY HIS WORK, EQUIPMENT, EMPLOYEES OR THOSE OF HIS SUBCONTRACTORS TO A CONDITION AT LEAST EQUAL TO THAT EXISTING IMMEDIATELY PRIOR TO THE BEGINNING OF OPERATIONS. TO THIS END, THE CONTRACTOR SHALL PERFORM AS REQUIRED ALL NECESSARY HIGHWAY OR DRIVEWAY, WALK, IRRIGATION AND LANDSCAPING WORK. SUITABLE MATERIALS AND METHODS SHALL BE USED FOR SUCH RESTORATION.
6.1.3. WHERE MATERIAL OR DEBRIS HAS WASHED OR FLOWED INTO OR BEEN PLACED IN WATER COURSES, DITCHES, DRAINS, CATCH BASINS, OR ELSEWHERE AS A RESULT OF THE CONTRACTOR'S OPERATIONS, SUCH MATERIAL OR DEBRIS SHALL BE REMOVED, SATISFACTORILY DISPOSED OF DURING PROGRESS OF WORK, AND THE AREA KEPT IN A CLEAN AND NEAT CONDITION AS DIRECTED BY THE ENGINEER.
6.1.4. CONTRACTOR SHALL DISPOSE OF ALL SITE DEMOLITION IN ACCORDANCE WITH STATE AND LOCAL REGULATIONS.
6.2. PROJECT RECORD DOCUMENTS
6.2.1. THE CONTRACTOR SHALL MAINTAIN ACCURATE AND COMPLETE RECORDS OF WORK ITEMS COMPLETED.
6.2.2. PRIOR TO THE PLACEMENT OF ANY ASPHALT OR CONCRETE PAVEMENT, THE CONTRACTOR SHALL SUBMIT TO THE ENGINEER "AS–BUILT" PLANS SHOWING LIMEROCK BASE GRADES, AND ALL DRAINAGE, WATER AND SEWER IMPROVEMENTS. PAVING OPERATIONS SHALL NOT COMMENCE UNTIL THE ENGINEER AND THE APPROVING AGENCY HAS REVIEWED THE "AS–BUILTS".
6.2.3. ALL REQUIRED DENSITY AND LBR TEST RESULTS FOR SUBGRADE SHALL BE PROVIDED TO THE ENGINEER AND SCHOOL DISTRICT OF WEST PALM BEACH PRIOR TO PLACING LIMEROCK BASE MATERIAL.
6.2.4. ALL REQUIRED DENSITY AND LBR TEST RESULTS FOR LIMEROCK SHALL BE PROVIDED TO THE ENGINEER AND SCHOOL DISTRICT OF WEST PALM BEACH PRIOR TO PLACING ASPHALT.
6.2.5. ALL "AS–BUILT" INFORMATION SUBMITTED TO THE ENGINEER SHALL BE SUFFICIENTLY ACCURATE, CLEAR AND LEGIBLE TO THE SATISFACTION OF THE ENGINEER THAT THE INFORMATION PROVIDES A TRUE REPRESENTATION OF THE IMPROVEMENTS CONSTRUCTED.
6.2.6. LAKE AS–BUILTS WILL BE CROSS SECTIONED SHOWING THE DESIGNED SECTION AS DASHED, AS–BUILT SECTION AS SOLID, AND HAVE THE TOP OF BANK REFERENCE TO THE LAKE MAINTENANCE EASEMENT. SPACING BETWEEN EACH CROSS–SECTION SHALL BE SUCH AS TO PROVIDE ENOUGH DATA TO DETERMINE IF THE LAKE WAS CONSTRUCTED AS DESIGNED.
6.2.7. UPON COMPLETION OF CONSTRUCTION, THE CONTRACTOR SHALL SUBMIT TO THE ENGINEER OF RECORD TWO COMPLETE SETS OF "AS–BUILT" CONSTRUCTION DRAWINGS. THESE DRAWINGS SHALL BE MARKED TO SHOW "RECORD DRAWING" OR "AS–BUILT" CONSTRUCTION CHANGES AND DIMENSIONED LOCATIONS AND ELEVATIONS OF ALL IMPROVEMENTS AND SHALL BE SIGNED AND SEALED BY A REGISTERED LAND SURVEYOR OR ENGINEER. FINAL AS–BUILT INFORMATION SHALL BE SUBMITTED ON AN AUTOCAD & PDF FORMAT AS DIRECTED BY THE ENGINEER.

7. DEWATERING PERMIT
7.1. DEWATERING PERMIT IS NOT AVAILABLE FOR THE SITE DEVELOPMENT. IT IS THE CONTRACTOR'S RESPONSIBILITY TO OBTAIN A DEWATERING PERMIT.

8. UNSUITABLE MATERIAL REMOVAL AND DISPOSAL
8.1. CONTRACTOR IS RESPONSIBLE FOR DETERMINATION/INVESTIGATION OF SUBSURFACE CONDITIONS. ALL UNSUITABLE MATERIAL SURFACE AND SUBSURFACE WITHIN AREAS OF CONSTRUCTION IS TO BE REMOVED AND DISPOSED OF IN ACCORDANCE WITH ALL APPLICABLE REGULATIONS. UNSUITABLE MATERIAL INCLUDES BUT IS NOT LIMITED TO: DEBRIS, ORGANICS/MUCK , AND PLASTIC MATERIAL. ALL UNSUITABLE MATERIAL REMOVED SHALL BE REPLACED WITH SUITABLE MATERIAL.

9. GEOTECHNICAL REQUIREMENTS
9.1. CONTRACTOR IS RESPONSIBLE FOR DETERMINATION/INVESTIGATION OF SUBSURFACE CONDITIONS.

10. DEMOLITION NOTES
10.1. PROPER SAFETY PRECAUTIONS SHALL BE TAKEN TO SEPARATE AREA OF DEMOLITION FROM SURROUNDING PROPERTY.
10.2. ALL ASPHALT AND CURB SHALL BE SAWCUT AT THE LIMITS OF DEMOLITION PRIOR TO REMOVAL.
10.3. ALL DEMOLITION TO BE PERFORMED IN A MANNER TO ELIMINATE HAZARDS TO PERSONS AND PROPERTY. MINIMIZE INTERFERENCE WITH USE OF ADJACENT AREAS, PROVIDE NON–DISRUPTION OF SERVICES PROVIDED BY EXISTING UTILITIES TO ADJACENT AREAS, AND TO PROVIDE FREE PASSAGE TO AND FROM ADJACENT AREAS OR STRUCTURES.
10.4. PRIOR TO AND DURING DEMOLITION, CONTRACTOR SHALL TAKE NECESSARY PRECAUTIONS TO AVOID DAMAGE TO EXISTING ITEMS TO REMAIN.
10.5. DEBRIS RESULTING FROM DEMOLITION SHALL BECOME THE PROPERTY OF THE CONTRACTOR AND SHALL BE PROPERLY DISPOSED OF ON A DAILY BASIS. DISPOSAL OF DEBRIS SHALL BE IN COMPLIANCE WITH APPLICABLE FEDERAL, STATE AND LOCAL PERMITS, RULES AND/OR REGULATIONS.
10.6. HAZARDOUS MATERIALS, IF PRESENT, SHALL BE DEALT WITH IN A MANNER CONSISTENT WITH FEDERAL, STATE AND LOCAL REGULATIONS.
10.7. UPON COMPLETION OF DEMOLITION, SITE IS TO BE LEFT IN CLEAN CONDITION FREE OF DEBRIS.
10.8. CONTRACTOR TO PROVIDE PROPER SEDIMENT CONTROL AND PROTECTION OF STORM WATER STRUCTURES, BOTH WITHIN AND OUTSIDE THE LIMITS OF DEMOLITION AND P/L, TO PREVENT DEPOSIT OF SEDIMENTS CONVEYED THROUGH RUNOFF. CONTRACTOR TO CLEAN AND REMOVE SEDIMENTS FROM ALL STRUCTURES AS NEEDED.
10.9. EXISTING UTILITIES INFORMATION IS PROVIDED FOR REFERENCE ONLY. CONTRACTOR IS RESPONSIBLE FOR IDENTIFYING ALL UTILITIES SHOWN OR NOT SHOWN PRIOR TO DEMOLITION. CONTRACTOR SHALL HAVE ALL UTILITIES PROPERLY LOCATED PRIOR TO COMMENCEMENT OF DEMOLITION.
10.10. BRICK AND GROUT ANY REMAINING HOLE OPENINGS IN EXISTING STRUCTURES AFTER REMOVAL OF ANY PIPE DESIGNATED FOR REMOVAL.

11. EARTHWORK
11.3. GENERAL
11.3.1. IT IS THE CONTRACTOR'S RESPONSIBILITY TO REQUEST A COPY OF THE GEOTECHNICAL ENGINEERING SOILS REPORT AND ADHERE TO THE CONDITIONS AND RECOMMENDATIONS STATED WITHIN.
11.3.2. NONE OF THE EXISTING MATERIAL IS TO BE INCORPORATED IN THE LIMEROCK BASE.
11.3.3. ALL SUB–GRADE UNDER PAVED AREAS SHALL HAVE A MINIMUM LBR VALUE OF 40 AND SHALL BE COMPACTED TO 98% OF THE MAXIMUM DENSITY AS DETERMINED BY AASHTO T–180.
11.3.4. ALL FILL MATERIAL IN AREAS NOT TO BE PAVED SHALL BE COMPACTED TO 95% OF THE MAXIMUM DENSITY AS DETERMINED BY AASHTO T–180.
11.3.5. A 2" BLANKET OF TOP SOIL SHALL BE PLACED OVER ALL AREAS TO BE SODDED.
11.4. ON–SITE
11.4.1. ALL ORGANIC AND OTHER UNSUITABLE MATERIAL UNDER THOSE AREAS TO BE PAVED SHALL BE REMOVED TO A DEPTH OF THREE (3) FEET BELOW FINISHED GRADE AND FOR THREE (3) FEET BEYOND THE PERIMETER OF THE PAVING AND DISPOSED OF BY CONTRACTOR AS PART OF WORK.
11.4.2. SUITABLE BACKFILL SHALL BE MINIMUM LBR 40 MATERIAL COMPACTED TO 98% OF THE MAXIMUM DENSITY AS DETERMINED BY AASHTO T–180 THREE (3) FEET BEYOND PERIMETER OF THE PAVING.
11.4.3. ALL UNSUITABLE MATERIAL UNDER EXFILTRATION TRENCH LOCATIONS SHALL BE REMOVED AND DISPOSED OF BY CONTRACTOR AS PART OF THIS WORK.

12. STORM DRAINAGE
12.1. CONTRACTOR MAY UTILIZE ONE OF THE FOLLOWING MATERIALS (AS DIRECTED AND APPROVED BY APPROVING AUTHORITY) ON A SIZE FOR SIZE BASIS:
12.1.1. ALUMINUM
12.1.1.1. PIPE SHALL BE ALUMINUM, MANUFACTURED IN CONFORMANCE WITH ASTM B–209. METAL PIPE SHALL NOT BE ALLOWED WITHIN THE ROAD RIGHT–OF–WAY.
12.1.1.2. PIPE SHALL BE SPIRAL RIB DRAINAGE PIPE WITH 3/4" x 3/4" RIBS, APPROXIMATELY 7–1/2" ON CENTER. GAUGE THICKNESS SHALL MEET FDOT STANDARD 945–1.
12.1.1.3. PIPE COUPLING BANDS SHALL BE 12" WIDE STANDARD SPLIT BANDS OF THE SAME ALLOY AS THE PIPE AND MAY BE ONE GAUGE LIGHTER THAN THE PIPE.
12.1.1.4. POLYURETHANE OR OTHER SEALANT SHALL BE USED WITH COUPLING BANDS ON ALL NON–PERFORATED PIPE.
12.1.1.5. CONTECH ULTRA–FLO
12.1.2. REINFORCED CONCRETE (RCP)
12.1.2.1. REQUIREMENTS OF SECTION 449 OF THE FDOT STANDARD SPECIFICATIONS. ALL REINFORCED CONCRETE PIPE SHALL BE CLASS III WATER TIGHT AND CONFORM TO THE STANDARD SPECIFICATIONS
12.1.2.2. JOINTS IN RCP SHALL EMPLOY O–RING TYPE GASKETS AS SPECIFIED IN SECTION 942–1 OF FDOT STANDARD SPECIFICATIONS AND ASTM C443–98.
12.1.2.3. PRECAST CONCRETE MANHOLES AND CATCH BASINS SHALL MEET THE REQUIREMENTS OF ASTM SPECIFICATION C–478 AND 647.
12.1.2.4. CONCRETE FOR PRECAST MANHOLES AND CATCH BASINS SHALL HAVE A MINIMUM COMPRESSIVE STRENGTH OF 4000 PSI AT 28 DAYS.
12.1.2.5. REINFORCING STEEL FOR MANHOLES AND CATCH BASINS SHALL CONFORM TO ASTM SPECIFICATION A–615 AND A–305, LATEST REVISION.
12.1.2.6. ALL RE–BAR SPLICES IN CONCRETE STRUCTURES SHALL HAVE A MINIMUM LAP OF 24 BAR DIAMETERS.
12.1.2.7. ALL JOINTS IN CONCRETE STRUCTURES SHALL BE FINISHED WATERTIGHT.
12.1.2.8. ALL SPACES AROUND PIPING ENTERING OR LEAVING MANHOLES AND CATCH BASINS SHALL BE COMPLETELY FILLED WITH 2:1 CEMENT MORTAR.
12.1.2.9. ALL CONCRETE PIPE SHALL HAVE MODIFIED TONGUE AND GROOVE JOINT AND HAVE RUBBER GASKETS, UNLESS OTHERWISE SPECIFIED.
12.1.3. HIGH DENSITY POLYETHYLENE PIPE (HDPE)
12.1.3.1. HIGH DENSITY POLYETHYLENE PIPE FOR STORM SEWERS SHALL CONFORM TO FDOT 948–2.
12.1.4. POLYVINYL–CHLORIDE PIPE (PVC)
12.1.4.1. POLYVINYL–CHLORIDE PIPE FOR STORM SEWERS SHALL CONFORM TO FDOT 948–1.
12.1.4.2. CONTECH A2000 PVC
12.2. CONCRETE PIPE FOR STORM DRAINAGE SYSTEMS SHALL CONFORM TO THE REQUIREMENTS OF FDOT STANDARD SPECIFICATIONS FOR ROADS AND BRIDGES, CURRENT EDITION, SECTION 430.
12.3. BEDDING AND INITIAL BACKFILL OVER DRAINAGE PIPE SHALL BE SAND WITH NO ROCK LARGER THAN 3/4" & 2" DIAMETER, RESPECTIVELY.
12.4. BACKFILL MATERIAL UNDER PAVED AREAS SHALL BE COMPACTED TO 98% OF THE MAXIMUM DENSITY AS DETERMINED BY AASHTO T–180.
12.5. BACKFILL MATERIAL UNDER AREAS NOT TO BE PAVED SHALL BE COMPACTED TO 95% OF THE MAXIMUM DENSITY AS DETERMINED BY AASHTO T–180 (INCLUDES SWALE AREAS).
12.6. CONTRACTOR SHALL INSTALL AND MAINTAIN TEMPORARY SILT SCREENERS IN CATCH BASINS AND AT LOCATIONS AS DIRECTED BY THE ENGINEER UNTIL FINAL ACCEPTANCE OCCURS.

13. PAVING
13.17. GENERAL
13.17.1. ALL UNDERGROUND UTILITIES SHALL BE COMPLETED PRIOR TO THE CONSTRUCTION OF THE LIMEROCK BASE AND PRIOR TO THE PLACEMENT OF THE PAVEMENT.
13.17.2. ALL STREET CORNER PAVEMENT RADII SHALL BE 25 FEET UNLESS OTHERWISE NOTED ON THE PLANS.
13.17.3. TWO ROWS OF BAHIA SOD SHALL BE LAID ALONG CURB WITHIN TWO WEEKS OR AS DIRECTED BY THE ENGINEER OF INSTALLING FIRST LIFT OF ASPHALT.
13.18. MATERIALS
13.18.1. LIMEROCK BASE MATERIAL SHALL HAVE A MINIMUM OF 70% CARBONATES (CALCIUM AND MAGNESIUM) WITH A MINIMUM LBR OF 100.
13.18.2. SUBGRADE MATERIAL SHALL HAVE A MINIMUM LBR OF 40 AND INSTALLED AT 98% AASHTO T–180 SPECS. (INCLUDES STABILIZED ROADWAY SHOULDERS)
13.18.3. PRIME COAT AND TACK COAT SHALL MEET FLORIDA DEPARTMENT OF TRANSPORTATION (FDOT) STANDARDS.
13.18.4. SURFACE COURSE SHALL BE EQUAL TO FDOT TYPE S–3 (SP9.5 EQUIVALENT) ASPHALT CONCRETE. CONTRACTOR TO SUBMIT FDOT APPROVED ASPHALT MIX SHOP DRAWINGS FOR ENGINEER'S REVIEW/APPROVAL PRIOR TO PLACEMENT OF ANY ASPHALT.
13.19. INSTALLATION
13.19.1. LIMEROCK BASE MATERIAL SHALL BE 8" THICK OR AS SHOWN AND SHALL BE COMPACTED TO 98% OF THE MAXIMUM DENSITY AS DETERMINED BY AASHTO T–180.
13.19.2. LIMEROCK BASE MATERIAL SHALL BE PLACED IN TWO OR MORE EQUAL LIFTS.
13.19.3. ASPHALTIC CONCRETE SHALL BE AS INDICATED ON PLANS, AND PLACED IN TWO (2) LIFTS.
13.19.4. PRIME COAT SHALL BE PLACED ON ALL LIMEROCK BASES IN ACCORDANCE WITH FDOT STANDARDS.
13.19.5. TACK COAT SHALL BE PLACED AS REQUIRED IN ACCORDANCE WITH FDOT STANDARDS.
13.20. TESTING
13.20.1. ALL SUBGRADE, LIMEROCK AND ASPHALT TESTS REQUIRED SHALL BE TAKEN AT THE DIRECTION OF THE ENGINEER AND/OR SCHOOL DISTRICT OF WEST PALM BEACH.
13.21. PAVERS
13.21.1. ALL PAVER MATERIAL, INSTALLATION AND MAINTENANCE SPECIFICATIONS SHALL MEET THE REQUIREMENTS OF SCHOOL DISTRICT OF WEST PALM BEACH.

14. SIGNING AND MARKING
14.1. PAVEMENT MARKINGS, REFLECTIVE PAVEMENT MARKERS AND GEOMETRICS SHALL BE IN ACCORDANCE WITH THE MANUAL ON UNIFORM TRAFFIC CONTROL DEVICES FOR STREETS AND HIGHWAYS (MUTCD) AND COUNTY AND/OR SCHOOL DISTRICT OF WEST PALM BEACH TRAFFIC ENGINEERING DIVISION STANDARDS.
14.2. ALL PAVEMENT MARKINGS WITHIN THE PUBLIC RIGHT–OF–WAYS SHALL BE HOT APPLIED REFLECTORIZED THERMOPLASTIC IN ACCORDANCE WITH FDOT STANDARD SPECIFICATION SECTION 711.
14.3. REFLECTIVE PAVEMENT MARKERS SHALL BE CLASS A MARKERS MANUFACTURED IN ACCORDANCE WITH FDOT STANDARD SPECIFICATION 706 AND INSTALLED IN ACCORDANCE WITH THE MANUFACTURER'S RECOMMENDED PROCEDURES.
14.4. ALL EXISTING PAVEMENT MARKINGS IN CONFLICT WITH PROPOSED DESIGN SHALL BE REMOVED. METHODS OF REMOVAL TO BE APPROVED BY COUNTY AND/OR SCHOOL DISTRICT OF WEST PALM BEACH TRAFFIC ENGINEERING DEPARTMENT.
14.5. ALL SIGNS SHALL BE MANUFACTURED AND INSTALLED IN ACCORDANCE WITH THE MANUAL ON UNIFORM TRAFFIC CONTROL DEVICES (MUTCD).
14.6. ALL R1–1 SIGNS SHALL HAVE HIGH INTENSITY SHEETING.
14.7. ALL TEMPORARY PAVEMENT MARKINGS WITHIN PUBLIC RIGHT–OF–WAYS SHALL BE PAINT IN ACCORDANCE WITH COUNTY AND/OR SCHOOL DISTRICT OF WEST PALM BEACH TRAFFIC ENGINEERING DEPARTMENT MINIMUM STANDARDS UNLESS OTHERWISE NOTED EXCEPT ON FINAL LIFT WHICH SHALL BE FOIL BACK TAPE OR PAPER TAPE.
14.8. THE CONTRACTOR IS RESPONSIBLE FOR REMOVING ALL UTILITY MARKINGS ONCE THE WORK IS COMPLETED. CONTRACTOR SHALL USE SPECIAL CARE WHEN REMOVING THE UTILITY MARKINGS. THE REMOVAL METHOD NEEDS TO BE SUCH THAT IT DOES NOT DAMAGE THE SURFACES OF THE EXISTING WORK ALREADY IN PLACE. IF WATER–BLASTING OLDER ASPHALT PAVEMENT, CARE NEEDS TO BE TAKEN TO NOT DISCOLOR THE ASPHALT OR POLISH THE AGGREGATE. IF THE REMOVALS ARE ON OLDER CONCRETE SURFACES, THE ENTIRE SURFACE OF A PANEL OR SECTION NEEDS TO BE BLASTED TO SHOW UNIFORM COLOR THROUGHOUT THAT SAME PANEL OR SECTION. IN ANY CASE (ASPHALT OR CONCRETE SURFACE), THE METHOD NEEDS TO BE SUCH THAT A SLICK SURFACE IS NOT LEFT BEHIND. FINAL PAYMENT TO THE CONTRACTOR MAY BE WITHHELD UNTIL THE UTILITY MARKS ARE PROPERLY REMOVED.

15. LANDSCAPE NOTES
15.1. ALL CONSTRUCTION ACTIVITY, INCLUDING TRENCHING, IS TO BE A MINIMUM OF SIX (6) FEET FROM THE BASE OF ANY TREE THAT IS DESIGNATED TO REMAIN PER CODE SECTION 27–45.
15.2. ALL TREES PLANTED IN ISLANDS CONTAINING HYDRANTS OR FLCTIVS MUST COMPLY WITH FLORIDA FIRE PREVENTION CODE 18.3.4.1 – CLEARANCES OF 7'–6" IN FRONT OF AND TO THE SIDES OF THE FIRE HYDRANT, WITH A 4' CLEARANCE TO THE REAR OF THE HYDRANT.
15.3. METERS SHALL HAVE AT LEAST 3' OF UNOBSTRUCTED ACCESS TO AND VIEW OF THE MANHOLE OR METER FROM THE PUBLIC RIGHT–OF–WAY AND AT LEAST 5' OF VERTICAL CLEARANCE ABOVE THE MANHOLE OR METER PIT.
15.4. ALL LIMEROCK AND BASE MATERIALS SHALL BE REMOVED FROM THE PLANTER AREAS/ISLANDS AND REPLACED WITH APPROPRIATE PLANTING SOIL PRIOR TO THE LANDSCAPING OF THE SITE.
15.5. THE REMOVAL OF ANY TREE ON THE SITE IS PROHIBITED WITHOUT THE REQUIRED SCHOOL DISTRICT OF WEST PALM BEACH PERMIT. ANY SITE WORK MUST BE DONE UNDER AN ENVIRONMENTAL PERMIT PER SCHOOL DISTRICT OF WEST PALM BEACH CODE OF ORDINANCES.

16. SODDING REQUIREMENTS
16.1. ALL BERMS AND SWALES ARE TO BE SODDED (SEE LANDSCAPING AND IRRIGATION PLANS)
16.2. LAKE SIDE SLOPES SHALL BE TOP SOILED AND STABILIZED THROUGH SEEDING AND PLANTING FROM 2 FEET BELOW TO 1 FOOT ABOVE THE CONTROL ELEVATION.
16.3. SOD AREAS ADJACENT TO PAVEMENT HAVING RUNOFF TO SWALES (INCLUDING ROADWAY STABILIZED SHOULDERS) SHALL BE GRADED 0.2' LOWER THAN PROPOSED EDGE OF PAVEMENT PLAN GRADES TO ALLOW FOR PLACEMENT OF SOD. PEG ALL SOD ON LAKE BANK SLOPES, SWALE SLOPES AND GROUND BETWEEN EDGE OF PAVEMENT AND SWALE AREAS IN PROPOSED SHEET FLOW AREAS.

THE STANDARD NOTES CONTAINED HEREON ARE GENERAL IN NATURE. FOR ANY CONTRADICTION BETWEEN THESE GENERAL NOTES AND THE UTILITY OWNER'S STANDARD DETAILS AND NOTES, THE UTILITY OWNER'S NOTES AND DETAILS GOVERN.

Building Code Services
THIS DOCUMENT WAS REVIEWED FOR COMPLIANCE WITH ALL STATUTES, CODES, AND STANDARDS APPLICABLE TO PALM BEACH COUNTY SCHOOL DISTRICT FACILITIES.
THERE MAY BE ADDITIONAL CODE OR DISTRICT REQUIREMENTS NOT SHOWN ON THE PLANS. PLAN REVIEW DOES NOT RELIEVE THE BUILDER OR DESIGN PROFESSIONAL OF RECORD FROM FULL COMPLIANCE WITH ALL DISTRICT REQUIREMENTS AND APPLICABLE CODES.
BY: Rômulo Silva 01/20/2026

SAFETY IS IN YOUR HANDS.
EVERY DIG. EVERY TIME.

PETER JOSEPH PELLERITO
LICENSE
No. 50063
STATE OF FLORIDA
PROFESSIONAL ENGINEER

APPROVED : PETER J. PELLERITO, P.E.
FLA. REGISTRATION NO. 50063 DATE : 10/29/2025

REVISIONS

SDPBC HOPE CENTENNIAL ELEMENTARY
WEST PALM BEACH, FLORIDA
FOR: SCHOOL DISTRICT OF PALM BEACH COUNTY

GENERAL NOTES & SPECIFICATIONS

MILLER LEGG
South Florida Office: 13680 NW 5th Street, Suite 200
Sunrise, FL 33325
(954) 436-7000
www.millerlegg.com

CERTIFICATE OF AUTHORIZATION: LB6680

DES	DRWN	CHK
DES.	DWN.	CHK.

PROJECT / FILE NO. 24–00182
DRAWING NO. C1.0
DATE DRAWN 3/24/25

BCS Received 01/20/2026 ID 31952

V:\PROJECTS\2024\24-00182 - SDPBC HOPE CENTENNIAL\DRAWINGS\24-00182_CVR.DWG by PPELLERI 9/25/2025 4:40:41 PM

SDPBC PROJECT NO. 0012-2402

LINETYPE & SYMBOLS LEGEND

CLEARING & DEMOLITION LINETYPES	
—X—X—X—X—X—X—X—	EXISTING FENCE (TO BE REMOVED)
	EXISTING CURB (TO BE REMOVED)
	EXISTING WALL (TO BE REMOVED)
	EXISTING TREE LINE/SHRUBS (TO BE REMOVED)
	EXISTING WATER EDGE (TO BE REMOVED)
SWR SWR	EXISTING SANITARY SEWER LINE (TO BE REMOVED)
SSFM SSFM	EXISTING SANITARY SEWER FORCE MAIN LINE (TO BE REMOVED)
STRM STRM	EXISTING STORM DRAINAGE LINE (TO BE REMOVED)
W W W	EXISTING WATER MAIN LINE (TO BE REMOVED)
	EXISTING UTILITY LINE (TO BE ABANDONED)

PROPOSED IMPROVEMENTS LINETYPES & SYMBOLS	
	PROPOSED BASELINE
E E E	PROPOSED BURIED ELECTRIC LINE
	PROPOSED EASEMENT LINE
—X—X—X—X—X—X—X—	PROPOSED FENCE LINE
	PROPOSED GUARDRAIL
	PROPOSED LIMITS OF CONSTRUCTION LINE
PL	PROPERTY BOUNDARY LINE
	PROPOSED LOT LINE
	PROPOSED PROPERTY SETBACK LINE
	PROPOSED EDGE OF PAVEMENT & CURB LINE
	PROPOSED ROADWAY CENTERLINE
R/W	RIGHT OF WAY LINE
	PROPOSED TREE/LANDSCAPE LINE
SSFM SSFM	PROPOSED SANITARY SEWER FORCE MAIN LINE
SL SL SL	PROPOSED SANITARY SEWER SERVICE LATERAL LINE
SWR SWR	PROPOSED SANITARY SEWER LINE
STRM STRM	PROPOSED EXFILTRATION TRENCH LINE
STRM STRM	PROPOSED STORM DRAINAGE LINE
	PROPOSED EDGE OF WATER LINE
	PROPOSED TOP OF BANK LINE
	PROPOSED TOE OF BANK LINE
	PROPOSED WALL LINE
FIRE FIRE	PROPOSED FIRE MAIN LINE
WS WS WS	PROPOSED POTABLE WATER SERVICE LINE
W W W	PROPOSED POTABLE WATER MAIN LINE
RW RW RW	PROPOSED NON-POTABLE RECLAIMED WATER LINE
	PROPOSED AIR RELEASE VALVE
	PROPOSED VALVE
	PROPOSED PLUG WITH BLOWOFF VALVE
	PROPOSED FIRE HYDRANT
	PROPOSED BACKFLOW PREVENTER
	PROPOSED WATER METER
	PROPOSED FIRE DEPARTMENT SIAMESE CONNECTION (FDC)
	PROPOSED DOUBLE DETECTOR CHECK VALVE (DDCV)
	PROPOSED SANITARY SEWER MANHOLE/CLEANOUT
	PROPOSED STORM DRAINAGE CATCH BASIN
	PROPOSED STORM DRAINAGE MANHOLE
	PROPOSED YARD DRAIN
	PROPOSED MITERED END SECTION
	PROPOSED FDOT TYPE 5 INLET
	PROPOSED FDOT TYPE 6 INLET
	PROPOSED FDOT TYPE 9 INLET
	PROPOSED STORMWATER POLLUTION PREVENETION SILT FENCE
	PROPOSED TURBIDITY BARRIER/CURTAIN
	PROPOSED INLET PROTECTION

EXISTING LINETYPES	
E E E	EXISTING BURIED ELECTRIC LINE
CATV CATV	EXISTING BURIED CABLE/TELEVISION LINE
COMM COMM	EXISTING BURIED COMMUNICATION LINE
FIRE FIRE	EXISTING FIRE LINE
G G G	EXISTING GAS LINE
RW RW RW	EXISTING NON-POTABLE RECLAIMED WATER LINE
OVHD OVHD	EXISTING OVERHEAD WIRE LINE
	EXISTING ABANDONED UTILITY LINE
SSFM SSFM	EXISTING SANITARY FORCE MAIN
SL SL SL	EXISTING SANITARY SEWER LATERAL
SWR SWR	EXISTING SANITARY SEWER LINE
STRM STRM	EXISTING STORM SEWER LINE
W W W	EXISTING POTABLE WATER LINE
WS WS WS	EXISTING POTABLE WATER SERVICE LINE

GENERAL ABBREVIATIONS

AC	ASBESTOS CEMENT
ALUM	ALUMINUM
ARV	AIR RELEASE VALVE
BE	BURIED ELECTRIC
BFP	BACKFLOW PREVENTER
BFV	BUTTERFLY VALVE
B/L	BASELINE
BOP	BOTTOM OF PIPE
BSP	BACTERIOLOGICAL SAMPLE POINT
BT	BURIED TELEPHONE
CATV	CABLE TELEVISION
CB	CATCH BASIN
CIP	CAST IRON PIPE
℄	CENTERLINE
CONC	CONCRETE
CV	CHECK VALVE
DDCV	DOUBLE DETECTOR CHECK VALVE
DIA	DIAMETER
DIP	DUCTILE IRON PIPE
ELEV	ELEVATION
EP	EXISTING PAVEMENT EDGE
EXIST	EXISTING
F&I	FURNISH & INSTALL
FDEP	FLORIDA DEPT. OF ENVIRONMENTAL PROTECTION
FDOT	FLORIDA DEPT. OF TRANSPORTATION
FH	FIRE HYDRANT
FM	FORCE MAIN
FPL	FLORIDA POWER & LIGHT
GE	GRATE ELEVATION
GV	GATE VALVE
HDPE	HIGH DENSITY POLYETHYLENE
IE	INVERT ELEVATION
LAT	LATERAL
LF	LINEAR FEET

GENERAL ABBREVIATIONS

MAX	MAXIMUM
MEG	MATCH EXISTING GRADE
MES	MITERED END SECTION
MFGR	MANUFACTURER
MH	MANHOLE
MIN	MINIMUM
MJ	MECHANICAL JOINT
NTS	NOT TO SCALE
OC	ON CENTER
OE	OVERHEAD ELECTRIC
OHW	OVERHEAD WIRE
PC	POINT OF CURVATURE
PHDPE	PERFORATED HIGH DENSITY POLYETHYLENE
PL	PROPERTY LINE
PRB	POLLUTION RETARDANT BAFFLE
PROP	PROPOSED
PSI	POUNDS PER SQUARE INCH
PV	PLUG VALVE
PVC	POLY VINYL CHLORIDE
RCP	REINFORCED CONCRETE PIPE
RE	RIM ELEVATION
RED	REDUCER
REQD	REQUIRED
RJ	RESTRAINED JOINT
R/W	RIGHT-OF-WAY
SAN SWR	SANITARY SEWER
STRM SWR	STORM SEWER
TEL	TELEPHONE
TOP	TOP OF PIPE
TYP	TYPICAL
UR	UTILITY RISER
VCP	VITRIFIED CLAY PIPE
WL	WATER LINE
WM	WATER METER

EXISTING SYMBOLS LEGEND

	SYM.	DESCRIPTION
CONTROL		AERIAL TARGET
		BENCH MARK
		CONCRETE MONUMENT
		IRON PIN
		NAIL & DISC
		IRON ROD AND CAP
		HUB AND TACK
PIPE FITTINGS		11.25° PIPE BEND
		22.5° PIPE BEND
		45° PIPE BEND
		90° PIPE BEND
		CROSS PIPE FITTING
		TEE PIPE FITTING
		WYE PIPE FITTING
		REDUCER PIPE FITTING
ELECTRICAL		ELECTRICAL MANHOLE
		ELECTRICAL OUTLET
		GROUND LIGHT
		ELECTRICAL JUNCTION BOX
		ELECTRICAL METER
		TRANSFORMER

	SYM.	DESCRIPTION
GAS / FUEL		GAS MANHOLE
		GAS VALVE
	MW	MONITORING WELL
	VP	VENT PIPE
TELE / TV	TSR	TELEPHONE RISER
		TELEPHONE MANHOLE
	CATV	CATV RISER
WATER / IRRIGATION		BACKFLOW PREVENTER
	ARV	AIR RELEASE VALVE
		FIRE HYDRANT
		SIAMESE CONNECTION
	WM	WATER METER
	WV	WATER VALVE
	DDCV	DOUBLE DETECTOR CHECK VALVE
	W	WELL
	ICV	IRRIGATION CONTROL VALVE
	IRC	IRRIGATION CONTROL BOX
		SPRINKLER
TREES		GENERIC TREE
		OAK TREE
		PALM TREE
		MANGROVE TREE
		CITRUS TREE
		BUSH-CROTON

	SYM.	DESCRIPTION
SANITARY SEWER		CLEAN OUT
	S	SANITARY MANHOLE
	STP	STAND PIPE
	SV	SEWER VALVE
	G	GREASE TRAP MANHOLE
STORM SEWER		CATCH BASIN
	D	STORM MANHOLE
		YARD DRAIN
		CURB INLET
MISCELLANEOUS		BORING HOLE LOCATION
	UNK	VALVE (UNKNOWN)
		BOLLARD
		FLAG POLE
	U	MANHOLE (UNKNOWN)
		SATELLITE DISH
		SIGNS
		PARKING METER
	AC	A/C UNIT
	MB	MAILBOX
		PEDESTRIAN SIGNAL UNIT
		TRASH RECEPTICLE
		TOPOGRAPHIC ELEVATION
UTILITY POLES		GUY WIRE
		GUY POLE
		WOOD LIGHT POLE
		METAL LIGHT POLE
		CONCRETE LIGHT POLE
		CONCRETE UTILITY POLE
		METAL UTILITY POLE
		WOOD UTILITY POLE
		MAST ARM & SIGNAL SUPPORT

TAGS

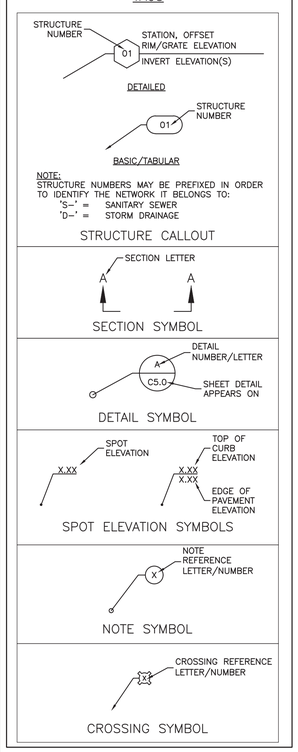

HATCH PATTERN LEGEND

EXISTING HATCH PATTERNS	
	EXISTING CONCRETE PAVEMENT/SIDEWALK
	EXISTING CONCRETE PAVERS
CLEARING & DEMOLITION HATCH PATTERNS	
	EXISTING BUILDING/STRUCTURE (TO BE REMOVED)
	EXISTING ASPHALT ROADWAY/SURFACE (TO BE REMOVED)
	EXISTING CONCRETE SIDEWALK/SURFACE (TO BE REMOVED)
PROPOSED IMPROVEMENTS HATCH PATTERNS	
	PROPOSED CONCRETE PAVEMENT/SIDEWALK
	PROPOSED ASPHALT PAVEMENT
	PROPOSED ASPHALT RESTORATION
	PROPOSED CONCRETE PAVERS
	PROPOSED GREEN SPACE
	PROPOSED STORMWATER POLLUTION PREVENTION SOIL TRACKING MEASURE/ GRAVEL CONSTRUCTION ENTRANCE

SINGLE LINE PIPE FITTING LEGEND

11.25° BEND		CROSS	
22.5° BEND		REDUCER	
45° BEND		TEE	
90° BEND		WYE	

LINE WEIGHTS

EXISTING	SHADED SOLID & DASHED LINES & TEXT DENOTE EXISTING EQUIPMENT, STRUCTURES AND WORK.
FUTURE	NON-SHADED DASHED LINES & TEXT DENOTE FUTURE EQUIPMENT, STRUCTURES AND WORK.
PROPOSED	NON-SHADED, BOLD, SOLID LINES & TEXT DENOTE PROPOSED EQUIPMENT, STRUCTURES AND WORK.

NOTES:
1. FOR GRAPHICAL CLARIFICATION ON PLANS CONTAINING BACKGROUND AERIAL PHOTOS, EXISTING ITEMS ARE SHOWN HOLLOW WHEREAS PROPOSED ARE SHOWN SOLID.
2. FOR GRAPHICAL CLARIFICATION THROUGHOUT THE PLAN SET, PROPOSED EQUIPMENT, STRUCTURES AND WORK NOT PERTAINING TO A SUB-SECTION OF THE SET (i.e. PAVEMENT MARKING & SIGNAGE PLAN, PAVING GRADING & DRAINAGE PLAN, UTILITY PLAN, ETC.) MAY BE SHADED IN AN EFFORT TO EMPHASIZE PROPOSED EQUIPMENT, STRUCTURES AND WORK ASSOCIATED WITH THE SUB-SECTION IN A MANNER OF DISTINCT DIFFERENTIATION FROM THAT OF EXISTING EQUIPMENT, STRUCTURES, AND UTILITIES. IT IS THE CONTRACTOR'S RESPONSIBILITY TO REVIEW AND VERIFY EXISTING CONDITIONS, AS WELL AS MAINTAIN KNOWLEDGE AND UNDERSTANDING OF THE PROPOSED WORK SPECIFIED WITHIN THE CONSTRUCTION SET.

PIPE & STRUCTURE LEGEND

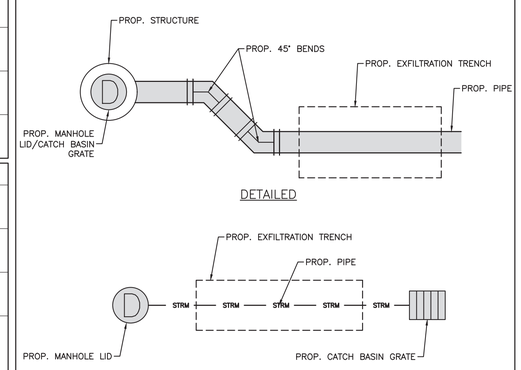

NOTE:
THE LEGEND SHOWN HEREON IS REPRESENTATIVE OF ALL MILLER LEGG DRAFTING STANDARDS AND IS NOT PROJECT SPECIFIC.

Building Code Services — THIS DOCUMENT WAS REVIEWED FOR COMPLIANCE WITH ALL STATUTES, CODES, AND STANDARDS APPLICABLE TO PALM BEACH COUNTY SCHOOL DISTRICT FACILITIES.
THERE MAY BE ADDITIONAL CODE OR DISTRICT REQUIREMENTS NOT SHOWN ON THE PLANS. PLAN REVIEW DOES NOT RELIEVE THE BUILDER OR DESIGN PROFESSIONAL OF RECORD FROM FULL COMPLIANCE WITH ALL DISTRICT REQUIREMENTS AND APPLICABLE CODES.
BY: Rômulo Silva 01/20/2026

811 SAFETY IS IN YOUR HANDS. EVERY DIG. EVERY TIME.

PETER JOSEPH PELLERITO — LICENSE No. 50063 — STATE OF FLORIDA — PROFESSIONAL ENGINEER

APPROVED : PETER J. PELLERITO, P.E.
FLA. REGISTRATION NO. 50063 DATE : 10/29/2025

REVISIONS

SDPBC HOPE CENTENNIAL ELEMENTARY
WEST PALM BEACH, FLORIDA
FOR: SCHOOL DISTRICT OF PALM BEACH COUNTY

CIVIL LEGEND, ABBREVIATIONS, & SYMBOLS

MILLER LEGG
South Florida Office: 13680 NW 5th Street, Suite 200
Sunrise, Florida 33325
954-436-7000
www.millerlegg.com

CERTIFICATE OF AUTHORIZATION: LB6680

DES	DRWN	CHK
DES.	DWN.	CHK.

PROJECT / FILE NO. 24-00182
DRAWING NO. C1.1
DATE DRAWN: 3/24/25

V:\PROJECTS\2024\24-00182 – SDPBC HOPE CENTENNIAL\DRAWINGS\24-00182_CVR.DWG by PPELLERI 9/25/2025 4:40:41 PM

BCS Received 01/20/2026 ID 31952

SDPBC PROJECT NO. 0012-2402

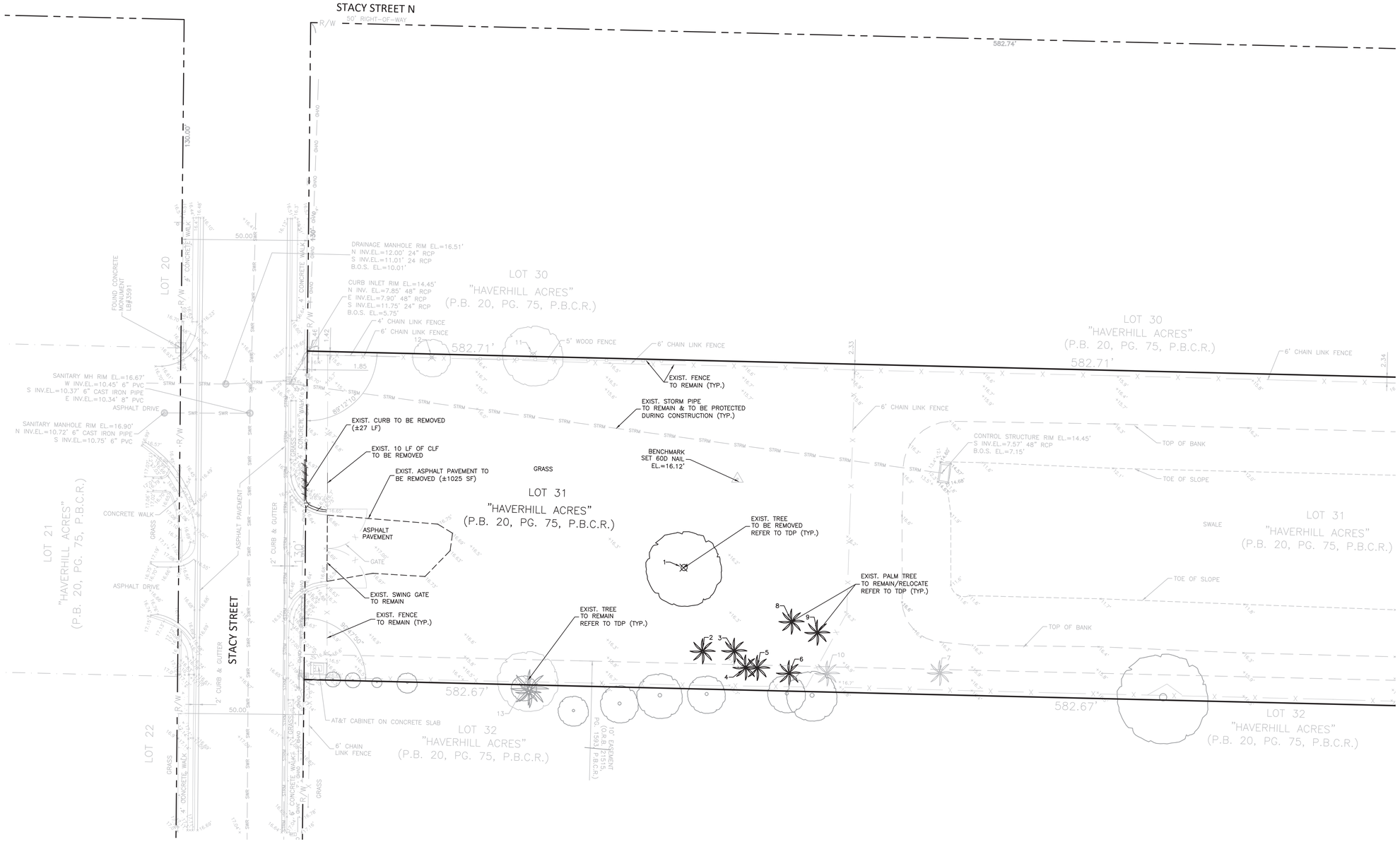

CLEARING & DEMOLITION NOTES:

1. CONTRACTOR TO VERIFY LOCATION OF ALL EXISTING UTILITIES.
2. IT SHALL BE THE CONTRACTOR'S SOLE RESPONSIBILITY TO TAKE THE NECESSARY PRECAUTIONS TO ENSURE PROPER SAFETY AND WORKMANSHIP WHEN WORKING IN THE VICINITY OF EXISTING UTILITY LINES.
3. CONTRACTOR SHALL BE RESPONSIBLE TO COORDINATE WITH FPL ON ANY WORK IN THE VICINITY OF OVERHEAD OR UNDERGROUND POWER LINES.
4. CONTRACTOR SHALL VERIFY PROPER CLEARANCE BELOW EXISTING OVERHEAD POWER LINES PRIOR TO WORKING WITHIN THE VICINITY OF POWER LINES.
5. IT IS THE CONTRACTOR'S RESPONSIBILITY TO IDENTIFY, REMOVE AND/OR RELOCATE ANY ABOVE OR BELOW GROUND STRUCTURES OR SERVICES THAT IMPACT THIS PROJECT. THIS MAY REQUIRE NEW SERVICE TIE-INS TO EXISTING SOURCES.
6. PRIOR TO COMMENCEMENT OF DEMOLITION THE CONTRACTOR WILL COORDINATE HIS ACTIVITIES WITH ALL THE UTILITY COMPANIES SERVING THIS AREA. CONTRACTOR IS TO COORDINATE FULLY WITH UTILITY COMPANIES ON EXACT LOCATION OF UNDERGROUND UTILITIES PRIOR TO EXCAVATION.
7. THE CONTRACTOR IS TO COMPLETELY REMOVE AND DISPOSE OF ALL STRUCTURES AND BUILDINGS THAT IS SO INDICATED INCLUDING FOUNDATIONS, TIMBER AND BRUSH, EXCEPT AS OTHERWISE INDICATED; STUMPS AND ROOTS; EXISTING PAVEMENT; OTHER STRUCTURES AS SHOWN OR REASONABLY IMPLIED IN THE DRAWINGS.
8. EXCEPT IN AREAS WHERE EXISTING TREES SHALL BE PRESERVED, A MINIMUM DEPTH OF REMOVAL SHALL BE (2) FOOT BELOW SUBGRADE IN ROADWAY AREAS AND TO ORIGINAL SOILS ELSEWHERE. WHERE EXISTING BUILDINGS ARE TO BE DEMOLISHED, ALL TRACES OF FOUNDATIONS AND UNDERGROUND UTILITIES ARE TO BE REMOVED (UNLESS OTHERWISE NOTED ON PLANS). THE CONTRACTOR IS RESPONSIBLE FOR PROPER DISPOSAL OF ALL WASTE MATERIAL.
9. WHERE PAVING OR STRUCTURES ARE TO BE REMOVED WHICH ABUT OR ARE A PART OF CONNECTED FACILITIES (THAT ARE OFF-SITE), RESTORATION OF ANY DAMAGE THAT MIGHT RESULT FROM DEMOLITION IS TO BE RESTORED TO A CONDITION EQUAL TO OR BETTER THAN EXISTING UNLESS SPECIFICALLY EXEMPTED BY THE PLANS. THE COST FOR SUCH RESTORATION SHALL BE INCIDENTAL TO OTHER CONSTRUCTION AND NO EXTRA COMPENSATION WILL BE ALLOWED.
10. THE LOCATION OF ALL EXISTING UTILITIES, STORM DRAINAGE AND TREES SHOWN ON THE PLANS HAVE BEEN DETERMINED FROM AVAILABLE INFORMATION AND IS GIVEN FOR THE CONVENIENCE OF THE CONTRACTOR. THE OWNER OR ENGINEER ASSUMES NO RESPONSIBILITY FOR ACCURACY. PRIOR TO THE START OF DEMOLITION THE CONTRACTOR SHALL VISIT THE SITE AND DETERMINE THE EXISTANCE & LOCATION OF ALL STRUCTURES, UTILITIES & TREES SHOWN OR NOT ON THE PLANS, WHICH WOULD NEED TO BE REMOVED OR PRESERVED.
11. THE CONTRACTOR IS TO COORDINATE THE RELOCATION OR REMOVAL OF IMPACTED OVERHEAD/UNDERGROUND UTILITIES, UTILITY POLES, LIGHTS AND LINES IN THE RIGHT-OF-WAY AND ON THE PROPERTY WITH THE APPROPRIATE SERVICE PROVIDER.
12. THE CONTRACTOR SHALL REFERENCE AND RESTORE PROPERTY CORNERS AND LAND MARKERS DISTURBED DURING CONSTRUCTION. (UNDER THE DIRECTION OF AN FLORIDA REGISTERED LAND SURVEYOR).
13. ALL DISTURBED AREAS OUTSIDE THE PROJECT AREA MUST BE RESTORED PRIOR TO FINAL ACCEPTANCE.
14. CONTRACTOR TO PROVIDE A CLEAN SAWCUT LINE AT ALL EDGES OF REMOVAL FOR PAVEMENT. SIDEWALKS, GUTTER AND/OR OTHER CONCRETE SURFACES.
15. CONTRACTOR SHALL OBTAIN A COPY OF THE SITE GEOTECHNICAL REPORT AND ADHERE TO ALL REQUIREMENTS CONTAINED THEREIN.
16. CONTRACTOR SHALL OBTAIN A COPY OF THE GEOTECHNICAL REPORT AND INCLUDE ALL NECESSARY SOIL WORK IN THE PROJECT BID.
17. ALL EROSION AND SEDIMENT CONTROL WORK SHALL CONFORM WITH LOCAL CITY/COUNTY/STATE SPECIFICATIONS, SUBJECT TO AUTHORIZED AND APPROVED VARIANCES, WAIVERS AND/OR CONDITIONS OF SITE PERMITS.
18. EROSION AND SEDIMENT CONTROL MEASURES SHALL BE PLACED PRIOR TO OR AS THE FIRST STEP IN, CONSTRUCTION. SEDIMENT CONTROL PRACTICES WILL BE APPLIED AS A PERIMETER DEFENSE AGAINST ANY TRANSPORTATION OF SILT OFF THE SITE.
19. ALL AREAS AFFECTED BY THIS WORK SHALL BE RESTORED TO A CONDITION EQUAL TO OR BETTER THAN EXISTING CONDITION, UNLESS SPECIFICALLY EXEMPTED BY THE PLANS. THE COST FOR SUCH RESTORATION SHALL BE INCIDENTAL TO OTHER CONSTRUCTION AND NO ADDITIONAL COMPENSATION SHALL BE ALLOWED.
20. THE CONTRACTOR SHALL IMMEDIATELY NOTIFY THE ENGINEER OF ANY DISCREPANCIES BETWEEN THESE PLANS AND FIELD CONDITIONS PRIOR TO CONSTRUCTION.
21. CONTRACTOR SHALL KEEP ANY AND ALL SAND, SILT OR OTHER DEBRIS FROM MOVING OFF-SITE.
22. CONTRACTOR SHALL BLOCK INTRUSION OF SAND, SILT OR OTHER DEBRIS INTO ANY DRAINAGE OR SANITARY SEWER STRUCTURE OR PIPING ON OR ADJACENT TO SITE.
23. FILTER FABRIC MUST BE INSTALLED UNDER ALL INLET GRATES, AT ALL TIMES WHEN INLETS ARE NOT PROTECTED BY SILT FENCE OR SYNTHETIC BALES, UNTIL THE LIMEROCK BASE IS FINISHED AND PRIMED.
24. NON STORMWATER DISCHARGES SUCH AS FIRE HYDRANT FLUSHING, ETC SHALL BE DISCHARGED TO EXISTING UNDERGROUND STORMWATER FACILITY.
25. ANY POTENTIALLY HAZARDOUS CHEMICALS BROUGHT ONTO THE JOB SITE WILL BE LIMITED AND KEPT IN ORIGINAL CONTAINER WITH MSDS LABEL.
26. NO SILT SHALL BE TRACKED ONTO PUBLIC ROADWAYS. ANY SILT DEPOSITED ON PUBLIC ROADWAYS SHALL BE REMOVED BY THE END OF THE WORK DAY.
27. TREES AND NON-CIVIL UTILITY LINES SUCH AS CATV, COMMUNICATIONS, ELECTRICAL, AND GAS ARE SHOWN BASED ON BEST AVAILABLE INFORMATION FOR THE CONVENIENCE OF THE CONTRACTOR. INFORMATION REGARDING THE SPECIFIC LIMITS AND PROCEDURES FOR REMOVAL AND/OR RELOCATION OF TREES AND NON-CIVIL UTILITIES SHALL BE COORDINATED BY THE CONTRACTOR, THE DESIGN CONSULTANT FOR THAT SCOPE OF WORK, AND THE APPLICABLE UTILITY COMPANY. DEMOLITION, REMOVAL/RELOCATION PLANS PRODUCED BY OTHER CONSULTANTS FOR THOSE SPECIFIC ITEMS SHALL SUPERSEED THE INFORMATION SHOWN ON THESE PLANS.
28. THE CONTRACTOR IS ADVISED THAT PROPERTIES ADJACENT TO THE PROJECT HAVE ELECTRIC, TELEPHONE, GAS, WATER, AND/OR SEWER SERVICE LATERALS WHICH MAY NOT BE SHOWN IN PLANS. THE CONTRACTOR MUST REQUEST THE LOCATION OF THESE LATERAL SERVICES FROM THE UTILITY COMPANIES. THE ADDITIONAL COST OF EXCAVATING, INSTALLING, BACKFILLING, AND COMPACTING AROUND THESE LATERAL SERVICES MUST BE INCLUDED IN THE BID RELATED ITEM FOR THE WORK BEING DONE.
29. CLEARING AND GRUBBING, GRADING AND OTHER INCIDENTAL WORK NECESSARY FOR HARMONIZATION OUTSIDE R/W SHALL BE INCLUDED IN RELATED BID ITEMS.
30. ALL DISPOSAL OF MATERIALS, RUBBISH, AND DEBRIS SHALL BE MADE AT A LEGAL DISPOSAL SITE OR BY OTHER PRIOR APPROVED MANNER. MATERIAL CLEARED FROM THE SITE AND DEPOSITED ON ADJACENT OR NEARBY PROPERTY WILL NOT BE CONSIDERED AS HAVING BEEN DISPOSED OF SATISFACTORILY.
31. CONTRACTOR TO RELOCATE TREES AS DIRECTED BY THE LANDSCAPE ARCHITECT. CONTRACTOR SHALL AVOID DAMAGE TO ANY EXISTING TREES TO REMAIN. EXISTING TREES SHALL BE REMOVED ONLY IF REQUIRED FOR CONSTRUCTION. THOSE TREES NOT INTERFERING WITH CONSTRUCTION SHALL BE PROTECTED IN PLACE.
32. CONTRACTOR SHALL ENSURE APPROPRIATE EROSION CONTROL DEVICES ARE IN PLACE BEFORE ANY CONSTRUCTION BEGINS AND ARE USED THROUGHOUT THE DURATION OF CONSTRUCTION.
33. CONTRACTOR SHALL ALWAYS PROVIDE AND MAINTAIN SAFE ACCESS TO ALL ADJACENT PROPERTIES AND SHALL MAINTAIN ACCOMMODATIONS FOR INTERSECTING & CROSSING TRAFFIC WITHIN THE CONSTRUCTION ZONE.
34. PEDESTRIAN CONTROL FOR SIDEWALK CLOSURES SHALL BE IN ACCORDANCE WITH THE FDOT ROADWAY AND TRAFFIC STANDARD INDEX 102-660.

SURVEY DATUM NOTE:

ELEVATIONS SHOWN ON THE PLANS ARE BASED ON THE NORTH AMERICAN VERTICAL DATUM OF 1988 (NAVD 88') OBTAINED FROM THE SURVEY PERFORMED BY MILLER LEGG & ASSOCIATES (PROJECT #24-00182), LAST REVISION DATED 10-31-24, RECEIVED 10-31-24.

SAFETY IS IN YOUR HANDS. EVERY DIG. EVERY TIME.

Building Code Services
THIS DOCUMENT WAS REVIEWED FOR COMPLIANCE WITH ALL STATUTES, CODES, AND STANDARDS APPLICABLE TO PALM BEACH COUNTY SCHOOL DISTRICT FACILITIES.
THERE MAY BE ADDITIONAL CODE OR DISTRICT REQUIREMENTS NOT SHOWN ON THE PLANS. PLAN REVIEW DOES NOT RELIEVE THE BUILDER OR DESIGN PROFESSIONAL OF RECORD FROM FULL COMPLIANCE WITH ALL DISTRICT REQUIREMENTS AND APPLICABLE CODES.
BY: Rômulo Silva 01/20/2026

PETER JOSEPH PELLERITO LICENSE No. 50063 STATE OF FLORIDA PROFESSIONAL ENGINEER

APPROVED : PETER J. PELLERITO, P.E.
FLA. REGISTRATION NO. 50063 DATE : 10/29/2025

REV.	DATE	REVISIONS	APPD.

SDPBC HOPE CENTENNIAL ELEMENTARY
WEST PALM BEACH, FLORIDA
FOR: SCHOOL DISTRICT OF PALM BEACH COUNTY

SITE CLEARING & DEMOLITION PLAN

MILLER LEGG
South Florida Office: 13680 NW 5th Street, Suite 200
Sunrise, FL 33325
954-424-7000
www.millerlegg.com

CERTIFICATE OF AUTHORIZATION: LB6680

DES.	DRWN.	CHK.

PROJECT / FILE NO. 24-00182
DRAWING NO. C2.0
DATE DRAWN: 11/19/24

BCS Received 01/20/2026 ID 31952

V:\PROJECTS\2024\24-00182 - SDPBC HOPE CENTENNIAL\DRAWINGS\24-00182_DEMO.DWG by CVAZQUEZ 1/15/2025 1:46:00 PM

SDPBC PROJECT NO. 0012-2402

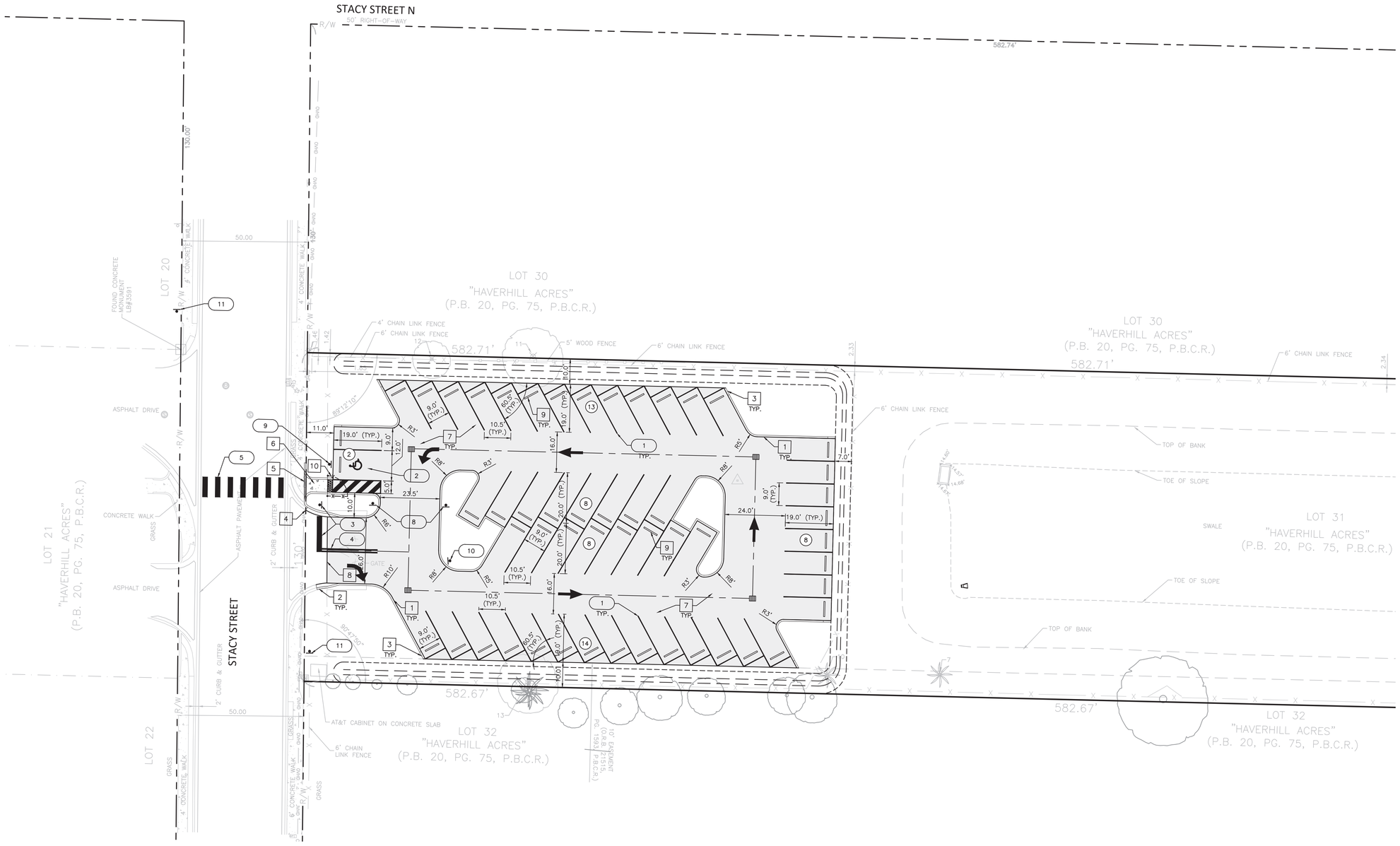

SIGNAGE AND MARKING NOTES:

1. ALL STOP BARS AND TRAFFIC CONTROL STRIPING SHALL BE THERMOPLASTIC. ALL OTHER STRIPING SHALL BE PAINTED UNLESS OTHERWISE SPECIFIED.
2. ALL PAINT USED FOR PAVEMENT MARKINGS SHALL CONFORM TO SECTION 971-13 OF THE FDOT STANDARD SPECIFICATIONS FOR ROAD AND BRIDGE CONSTRUCTION, LATEST EDITION (SSRBC). ALL PAINTED MARKINGS SHALL BE APPLIED IN ACCORDANCE WITH SECTION 710 OF THE FDOT SSRBC AND THE MANUAL FOR UNIFORM TRAFFIC CONTROL DEVICES (MUTCD). PAINT MAY ONLY BE USED FOR PRIVATE DEVELOPMENT IMPROVEMENTS OR AS TEMPORARY MARKINGS.
3. THERMOPLASTIC TRAFFIC MARKINGS SHALL CONFORM TO SECTION 711-2 OF THE FDOT SSRBC. ONLY ALKYD BASED MATERIALS SHALL BE USED. THERMOPLASTIC TRAFFIC MARKINGS SHALL BE APPLIED IN ACCORDANCE WITH SECTION 711 OF THE FDOT SSRBC AND THE MUTCD.
4. ALL REFLECTIVE PAVEMENT MARKINGS SHALL BE INSTALLED IN CONFORMANCE WITH SECTION 706 OF THE FDOT SSRBC.
5. ALL TRAFFIC SIGNS SHALL USE TYPE XI SHEETING AND BE "STANDARD" SIZE AS ESTABLISHED IN THE MUTCD.
6. BLUE REFLECTIVE PAVEMENT MARKERS SHALL BE PLACED OPPOSITE FIRE HYDRANTS IN THE CENTER OF THE NEAREST TRAVELED LANE TO MARK THEIR LOCATIONS.
7. STOP BARS TO BE A MINIMUM OF 4 FEET CLEAR BEHIND CROSSWALKS EDGE OF INTERSECTING TRAVEL LANE OR DRIVE AISLE.
8. HANDICAP PARKING SPACES SHALL BE DESIGNATED BY APPROPRIATE PAVEMENT MARKINGS AND SIGNS.
9. ALL PAVEMENT MARKINGS, REFLECTIVE PAVEMENT MARKERS, THERMOPLASTIC AND GEOMETRICS SHALL BE IN ACCORDANCE WITH THE MANUAL ON UNIFORM TRAFFIC CONTROL SERVICES, THE ROADWAY & TRAFFIC DESIGN STANDARDS. (F.D.O.T.).
10. ALL SIGNAGE AND PAVEMENT MARKINGS AND THEIR CONSTRUCTION SHALL CONFORM TO THE MANUAL ON UNIFORM TRAFFIC CONTROL DEVICES AND SCHOOL DISTRICT OF PALM BEACH COUNTY TRAFFIC ENGINEERING STANDARDS (LATEST EDITION).
11. THE CONTRACTOR SHALL TAKE PRECAUTION NOT TO DAMAGE EXISTING LANDSCAPING. IF EXISTING LANDSCAPING IS IN CONFLICT WITH PROPOSED WORK THE CONTRACTOR SHALL NOTIFY THE OWNER AND ENGINEER OF SAID CONFLICT.
12. ALL CONSTRUCTION SHALL BE IN STRICT ACCORDANCE WITH THE REQUIREMENTS OF THE SCHOOL DISTRICT OF PALM BEACH COUNTY BUILDING DEPARTMENT, AND ANY OTHER STATE OR LOCAL AGENCY WITH JURISDICTION. IT IS THE INTENT OF THESE PLANS TO BE IN ACCORDANCE WITH APPLICABLE CODES AND AUTHORITIES HAVING JURISDICTION. ANY DISCREPANCIES BETWEEN THESE PLANS AND APPLICABLE CODES SHALL BE IMMEDIATELY BROUGHT TO THE ATTENTION OF THE ENGINEER.
13. CONTRACTOR SHALL COMPLY WITH THE REQUIREMENTS OF THE EPA AND THE NATIONAL POLLUTION DISCHARGE ELIMINATION SYSTEM (NPDES).

SURVEY DATUM NOTE:

ELEVATIONS SHOWN ON THE PLANS ARE BASED ON THE NORTH AMERICAN VERTICAL DATUM OF 1988 (NAVD 88') OBTAINED FROM THE SURVEY PERFORMED BY MILLER LEGG & ASSOCIATES (PROJECT #24-00182), LAST REVISION DATED 10-31-24, RECEIVED 10-31-24.

CONSTRUCTION CALLOUTS:

1	PROP. TYPE 'D' CURB
2	PROP. TYPE 'F' CURB & GUTTER
3	PROP. TYPE 'D' CURB STRAIGHT END PER FDOT INDEX No. 520-001
4	CONNECT TO EXIST. CONC. CURB
5	CONNECT TO EXIST. CONC. SIDEWALK
6	PROP. CONC. SIDEWALK
7	PROP. ASPHALT PAVEMENT
8	CONNECT TO EXIST. ASPHALT PAVEMENT
9	PROP. 6' CONC. WHEEL STOP
10	PROP. 8' PEDESTRIAN SWING GATE

SIGNAGE & MARKING CALLOUTS:

1	PROP. 4" SOLID WHITE PARKING STRIPING
2	PROP. HANDICAP PARKING STRIPING
3	PROP. 24" SOLID WHITE STOP BAR AND PROP. R1-1 'STOP' SIGN
4	PROP. 6" SOLID DOUBLE YELLOW STRIPING W/ AMBER/AMBER R.P.M.'S @ 20' O.C.
5	PROP. 24" SOLID WHITE CROSSWALK STRIPING
6	PROP. SOLID WHITE DIRECTIONAL PAVEMENT MARKING
7	PROP. R1-1 'STOP' SIGN
8	PROP. R5-1 'DO NOT ENTER' SIGN
9	PROP. FTP-20-06 & FTP-22-06 HANDICAP PARKING SIGN
10	PROP. W1-6R 'RIGHT ONLY' SIGN
11	PROP. W11-2 PEDESTRIAN CROSSING SIGN

Building Code Services

THIS DOCUMENT WAS REVIEWED FOR COMPLIANCE WITH ALL STATUTES, CODES, AND STANDARDS APPLICABLE TO PALM BEACH COUNTY SCHOOL DISTRICT FACILITIES.

THERE MAY BE ADDITIONAL CODE OR DISTRICT REQUIREMENTS NOT SHOWN ON THE PLANS. PLAN REVIEW DOES NOT RELIEVE THE BUILDER OR DESIGN PROFESSIONAL OF RECORD FROM FULL COMPLIANCE WITH ALL DISTRICT REQUIREMENTS AND APPLICABLE CODES.

BY: Rõmulo Silva 01/20/2026

811 SAFETY IS IN YOUR HANDS. EVERY DIG. EVERY TIME.

PETER JOSEPH PELLERITO LICENSE No. 50063 STATE OF FLORIDA PROFESSIONAL ENGINEER

APPROVED : PETER J. PELLERITO, P.E.
FLA. REGISTRATION NO. 50063 DATE : 10/29/2025

NO.	DATE	REVISIONS	BY

SDPBC HOPE CENTENNIAL ELEMENTARY

WEST PALM BEACH, FLORIDA

FOR: SCHOOL DISTRICT OF PALM BEACH COUNTY

SITE GEOMETRY, MARKING, & SIGNAGE PLAN

MILLER LEGG
South Florida Office: 13680 NW 5th Street, Suite 200
Sunrise, FL 33325
954-746-7000
www.millerlegg.com

CERTIFICATE OF AUTHORIZATION: LB6680		
DES.	DRWN.	CHK.
PROJECT / FILE NO. 24-00182		
DRAWING NO. C3.0		
DATE DRAWN: 12/23/24		

V:\PROJECTS\2024\24-00182 - SDPBC HOPE CENTENNIAL\DRAWINGS\24-00182_GEO.DWG by CVAZQUEZ 7/9/2025 9:01:57 AM

BCS Received 01/20/2026 ID 31952

SDPBC PROJECT NO. 0012-2402

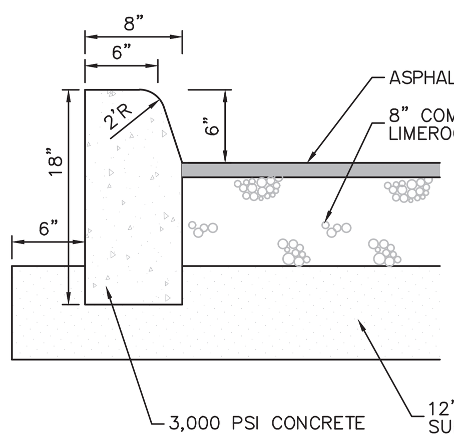

TYPE 'D' CURB
N.T.S.

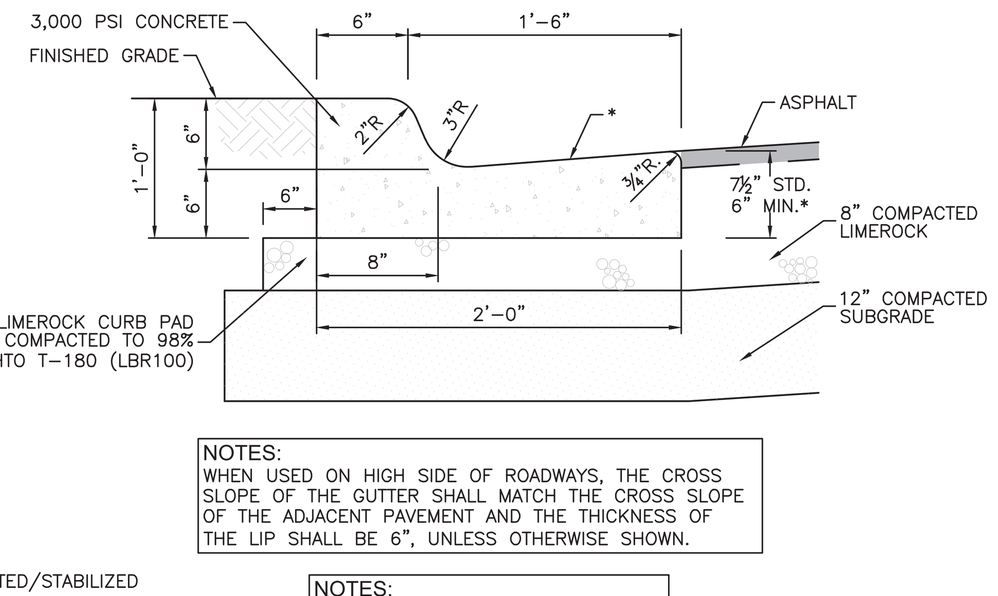

TYPE 'F' CURB & GUTTER
N.T.S.

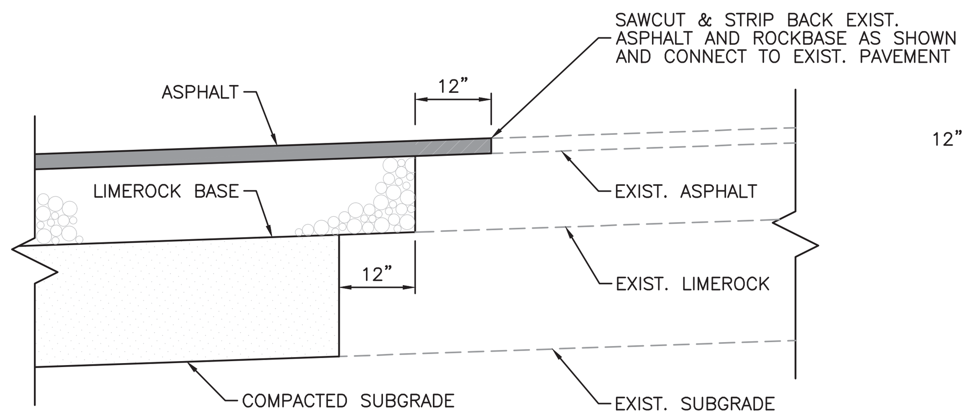

CONNECTION TO EXISTING PAVEMENT DETAIL
N.T.S.

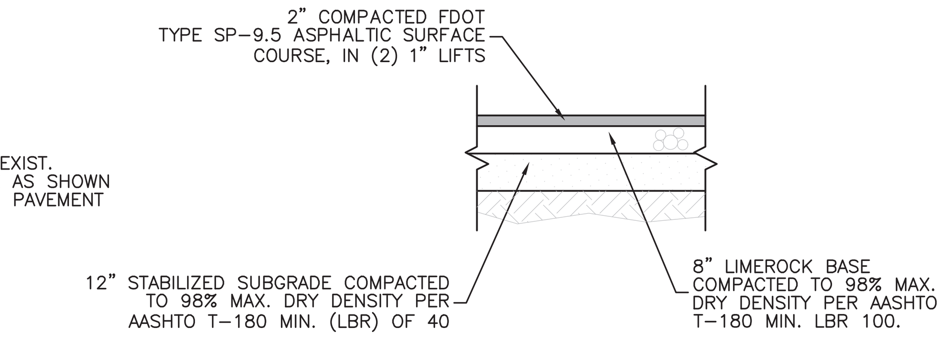

NOTE:
PAVEMENT AREAS SHOULD BE COMPACTED TO A MINIMUM OF 98% OF THE MODIFIED PROCTOR MAXIMUM DRY DENSITY TO A DEPTH OF AT LEAST 12" BELOW THE SUBGRADE LEVEL.

ASPHALT PAVEMENT TYPICAL CROSS-SECTION
N.T.S.

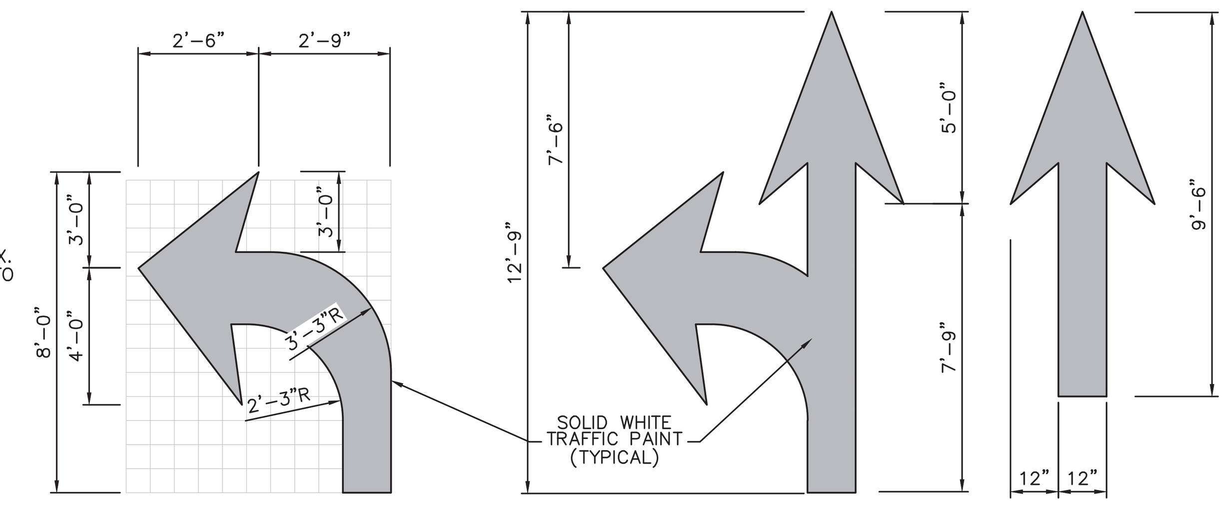

PAVEMENT MARKINGS DETAIL
N.T.S.

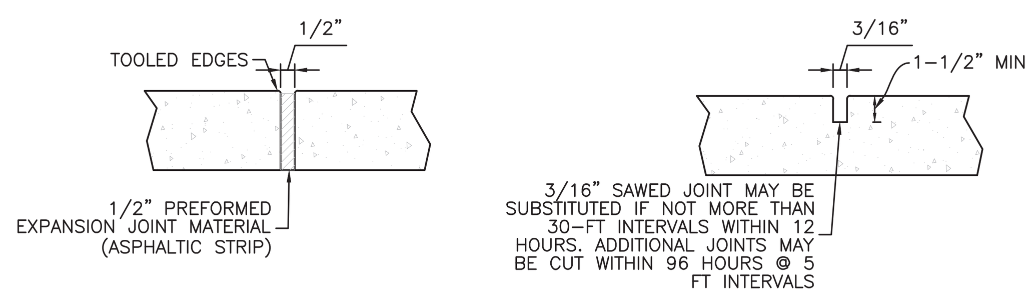

EXPANSION JOINT
(30 FT MAX SPACING)

CONTRACTION JOINT
(5 FT MAX SPACING)

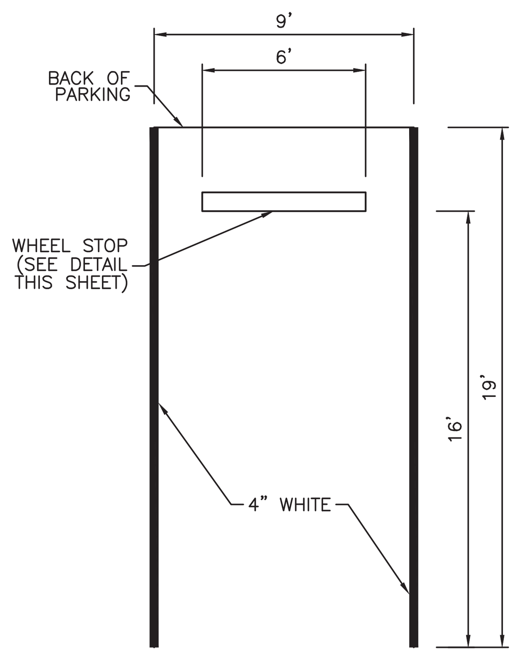

STANDARD PARKING SPACE
N.T.S.

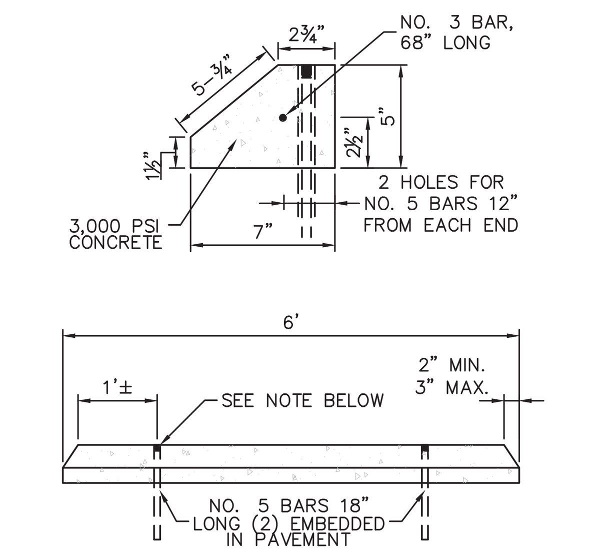

NOTE:
BARS TO BE DRIVEN 3/4 INCHES BELOW TOP OF WHEEL STOP AND GROUT FILLED FLUSH WITH TOP OF WHEEL STOP.

WHEEL STOP DETAIL
N.T.S.

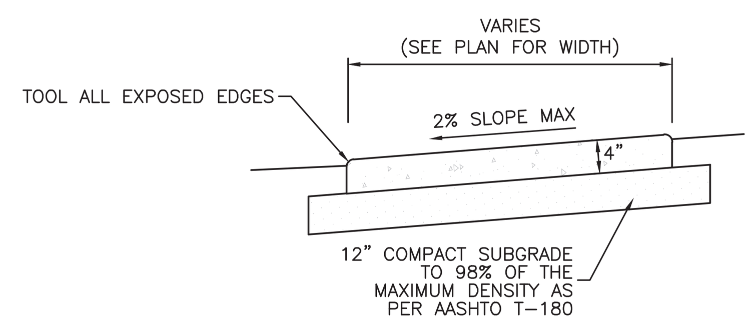

NOTES:
1. PROVIDE EXPANSION JOINTS BETWEEN SIDEWALK AND CURB OR AT ANY OTHER RIGID STRUCTURE/MATERIAL.
2. EXPANSION JOINTS SHALL BE PROVIDED AT 30 FT MAX SPACING. SIDEWALK JOINTS PLACEMENT SHALL BE IN ACCORDANCE WITH F.D.O.T. STANDARDS OR AS APPROVED BY ENGINEER.
3. ULTIMATE COMPRESSIVE STRENGTH OF CONCRETE SHALL BE 3,000 PSI @ 28 DAYS FOR SIDEWALKS/WALKWAYS.
4. FOR SIDEWALKS COMPACT SUBGRADE TO 98% OF THE MAXIMUM DENSITY AS DETERMINED BY AASHTO T-180.
5. TOOLED CONTRACTION JOINT SHALL BE PROVIDED AT 5 FT MAXIMUM SPACING. SAWED CONTRACTION JOINT MAY BE SUBSTITUTED IF CUT AT NO MORE THAN 30 FT INTERVALS WITHIN 12 HOURS AFTER CONCRETE HAS SET. ADDITIONAL CUTS AT 5 FT INTERVALS MUST BE CUT WITHIN 96 HOURS. SIDEWALK JOINTS PLACEMENT SHALL BE IN ACCORDANCE WITH F.D.O.T. STANDARDS OR AS APPROVED BY ENGINEER.
6. ALL CONCRETE SIDEWALKS SHALL BE CONSTRUCTED IN ACCORDANCE WITH F.D.O.T. STANDARDS, INCLUDING ANY REQUIRED 'CURB RAMPS'.
7. SIDEWALK SHALL BE 6" THICK AT DRIVEWAY LOCATIONS.

CONCRETE WALKWAY/SIDEWALK
N.T.S.

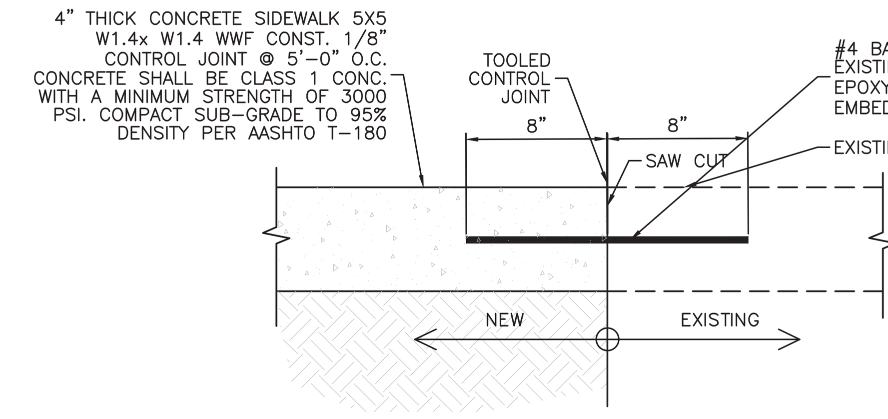

NEW SIDEWALK TO EXISTING CONNECTION DETAIL
N.T.S.

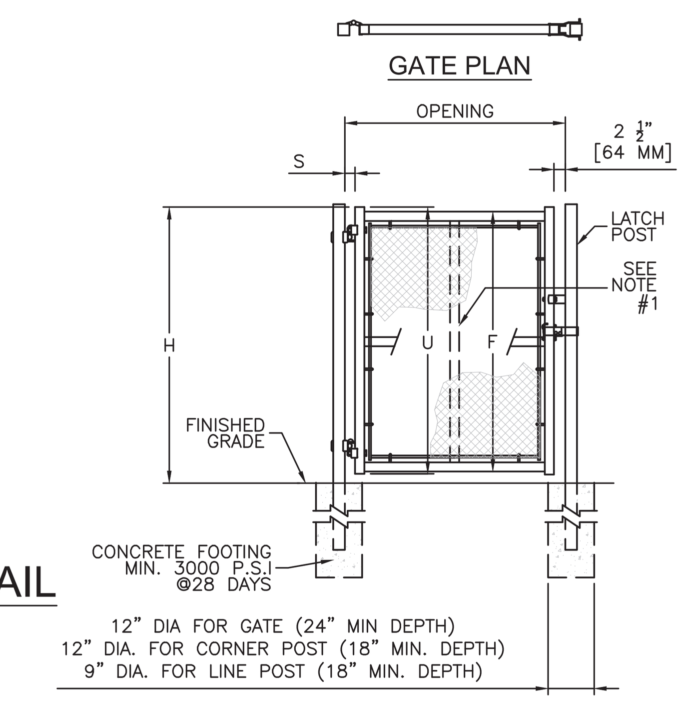

SINGLE GATE ELEVATION

NOTES:
1. CENTER UPRIGHT REQUIRED ON GATE LEAVES 8'-0" [2438 MM] & WIDER CENTER RAIL REQUIRED ON GATE LEAVES 10'-0" [3048MM] & HIGHER

SINGLE OR DOUBLE LEAF GATES		
NOM HEIGHT (H)	UPRIGHT HT (U)	FRAME HT (F)
WITHOUT BARBED WIRE	ACTUAL DIM	ACTUAL DIM
3'-0" [914MM]	2'-10" [864MM]	2'-8 1/2" [826MM]
3'-6" [1067MM]	3'-4" [1016MM]	3'-2 1/2" [978MM]
4'-0" [1219MM]	3'-10" [1168MM]	3'-8 1/2" [1130MM]
5'-0" [1524MM]	4'-10" [1473MM]	4'-8 1/2" [1435MM]
6'-0" [1829MM]	5'-10" [1778MM]	5'-8 1/2" [1740MM]
7'-0" [2134MM]	6'-10" [2083MM]	6'-8 1/2" [2045MM]
8'-0" [2438MM]	7'-10" [2388MM]	7'-8 1/2" [2350MM]
9'-0" [2743MM]	8'-10" [2692MM]	8'-8 1/2" [2654MM]
10'-0" [3048MM]	9'-10" [2997MM]	9'-8 1/2" [2959MM]
11'-0" [3353MM]	10'-10" [3302MM]	10'-8 1/2" [3264MM]
12'-0" [3658MM]	11'-10" [3607MM]	11'-8 1/2" [3569MM]

SINGLE LEAF GATES		
OPENING	GATE POSTS	HINGE SPACE (S)
FACE TO FACE	SQ & RND SIZES	POST TO UPRIGHT
3'-0" [914MM] THROUGH 6'-0"[1829MM]	2 1/2" [63.5MM] SQ OR 2.875" [73MM] OD	FOR SQUARE & ROUND GATE POSTS: 2 1/4" [57MM]
7'-0" [2134MM] THROUGH 10'-0"[3048MM]	3" [76MM] SQ OR 4" [102MM] OD	FOR SQUARE & ROUND GATE POSTS: 2 1/4" [57MM]
11'-0" [3353MM] THROUGH 12'-0" [3658MM]	4" [102MM] SQ OR 4" [102MM] OD	FOR SQUARE & ROUND GATE POSTS: 2 1/4" [57MM]
13'-0" [3962MM] THROUGH 18'-0" [5486MM]	6" [152MM] SQ OR 6.625" [168MM] OD	FOR GATE POSTS: SQ-2 1/4" [57MM] RND-3 1/2" [89MM]
19'-0" [5791MM] THROUGH 20'-0" [6096MM]	8" [203MM] SQ OR 8.625" [219MM] OD	FOR GATE POSTS: SQ-2 1/4" [57MM] RND-3 1/2" [89MM]

SINGLE SWING GATE DETAIL
N.T.S.

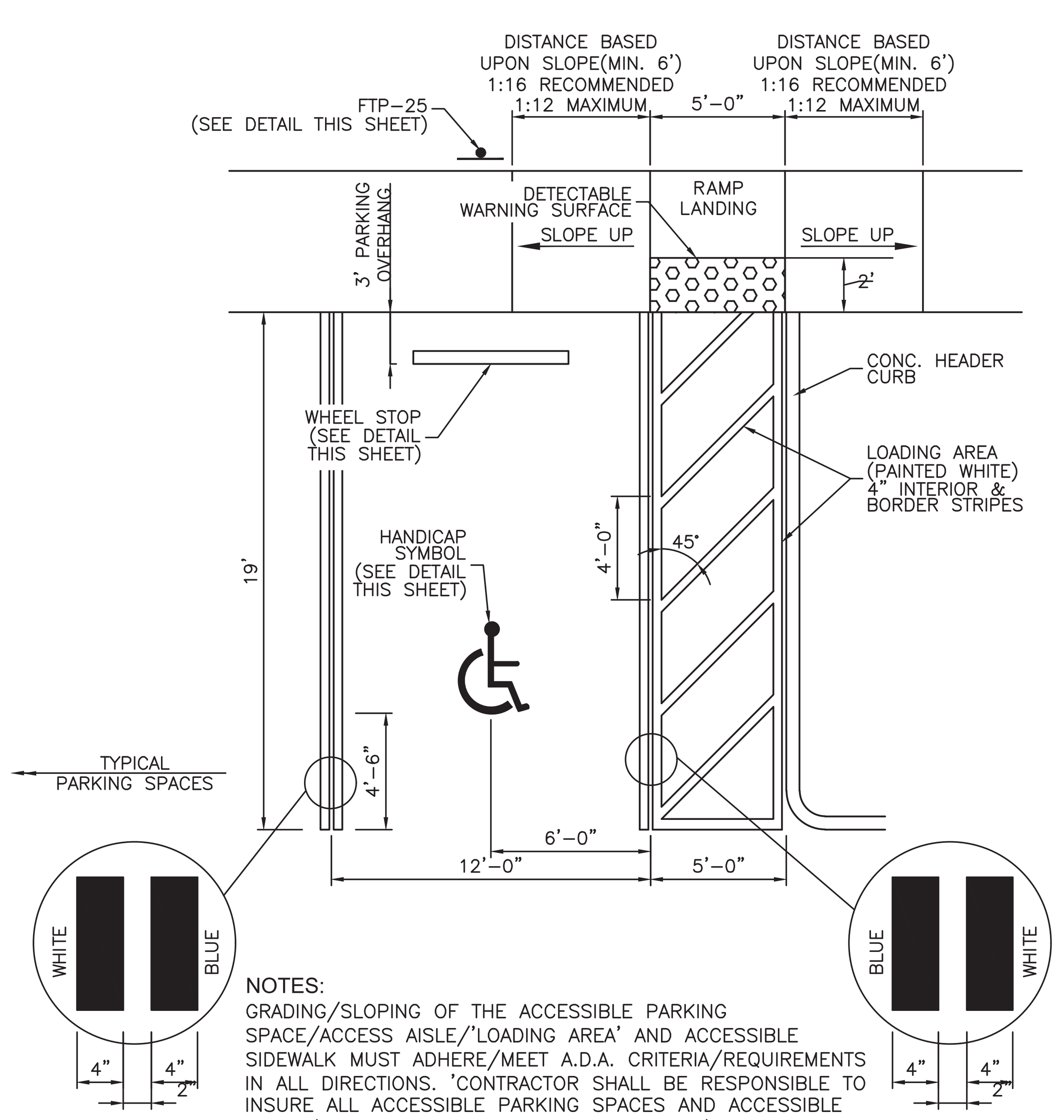

NOTES:
GRADING/SLOPING OF THE ACCESSIBLE PARKING SPACE/ACCESS AISLE/'LOADING AREA' AND ACCESSIBLE SIDEWALK MUST ADHERE/MEET A.D.A. CRITERIA/REQUIREMENTS IN ALL DIRECTIONS. 'CONTRACTOR SHALL BE RESPONSIBLE TO INSURE ALL ACCESSIBLE PARKING SPACES AND ACCESSIBLE PATHS/ROUTES CONFORM TO A.D.A. CRITERIA/REQUIREMENTS, IRRESPECTIVE OF PROPOSED GRADING NOTED ON PLANS.

HANDICAP PARKING SPACE
N.T.S.

NOTE:
SYMBOL TO BE PAINTED WHITE IN ALL HANDICAPPED SPACES.

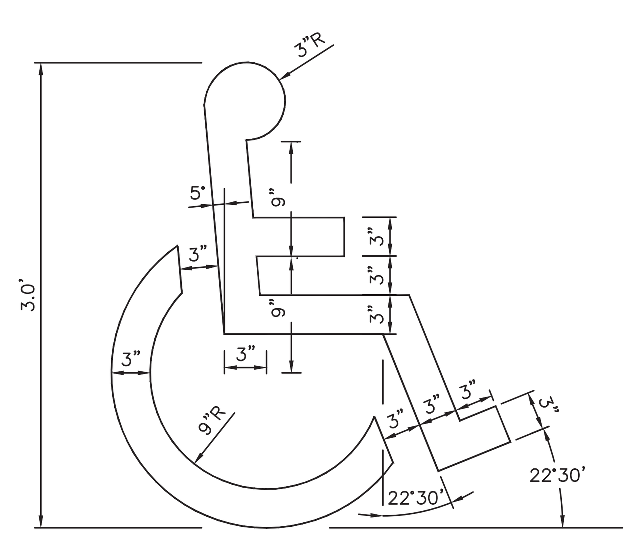

PAINTED HANDICAP SYMBOL
N.T.S.

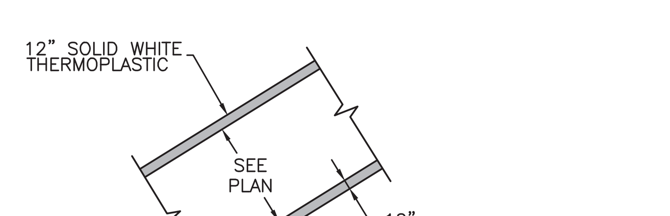

NOTE:
REFER TO STRIPING PLANS FOR ROUTING LOCATION.

PEDESTRIAN ROUTING STRIPING
N.T.S.

NOTES:
1. DETECTABLE WARNING SURFACE AS REQUIRED PER AMERICAN WITH DISABILITIES ACT DESIGN STANDARDS REQUIRED AT ALL CONCRETE SIDEWALK LANDINGS WITHIN PROJECT LIMITS.
2. STAMPED CONCRETE IS NOT PERMITTED FOR DETECTABLE WARNING SURFACES. ARMOR TILE OR AN APPROVED EQUAL SHALL BE USED.
3. WHEN NOT PLACED ON CURB RAMPS, DETECTABLE WARNINGS SHALL BE PLACED ON THE WALKING SURFACES ADJOINING A VEHICULAR WAY. THE BOUNDARY BETWEEN THE AREAS SHALL BE DEFINED BY A CONTINUOUS DETECTABLE WARNING WHICH IS 36" WIDE.
4. UNLESS NOT PLACED DIRECTLY ON A RAMP, DETECTABLE WARNING SURFACE MUST NOT EXCEED 2% SLOPE IN ANY DIRECTION.
5. WHEN PLACED ON CURB RAMPS, DETECTABLE WARNING SURFACE SHALL EXTEND THE FULL LENGTH AND WIDTH OF THE RAMP. FOR RAMPS WITHIN FDOT RIGHT-OF-WAY, REFER TO THE LATEST VERSION OF THE FDOT DESIGN STANDARDS INDEX #522-002.
6. CONSTRUCTION OF DETECTABLE WARNING SURFACE IS NOT LIMITED TO CONCRETE MATERIAL, HOWEVER, PRIOR TO CONSTRUCTION, THE CONTRACTOR MUST INFORM TO THE ENGINEER OF RECORD THE PROPOSED MATERIAL FOR THE DETECTABLE WARNING SURFACE. CONTRACTOR MUST ENSURE THAT THE FOLLOWING TRUNCATED DOME CRITERIA IS MET:
   A. DETECTABLE WARNING SURFACES SHALL CONTRAST VISUALLY WITH ADJOINING SURFACES. THE MATERIAL USED TO PROVIDE CONTRAST SHOULD CONTRAST BY AT LEAST 70%
   B. 90% OF THE INDIVIDUAL TRUNCATED DOMES MUST COMPLY WITH THE SPECIFIED DIMENSIONS AND DESIGN CRITERIA.
   C. NO TWO ADJACENT DOMES MAY BE NON-COMPLIANT.
   D. SURFACE MAY NOT DEVIATE MORE THAN 0.1" FROM A TRUE PLAN.
7. DETECTABLE WARNING SURFACES SHALL BE RECESSED INTO CONCRETE SIDEWALK TO INSURE FINISHED SURFACE IS FLUSH WITH FINISHED SURFACE OF CONCRETE SIDEWALK.

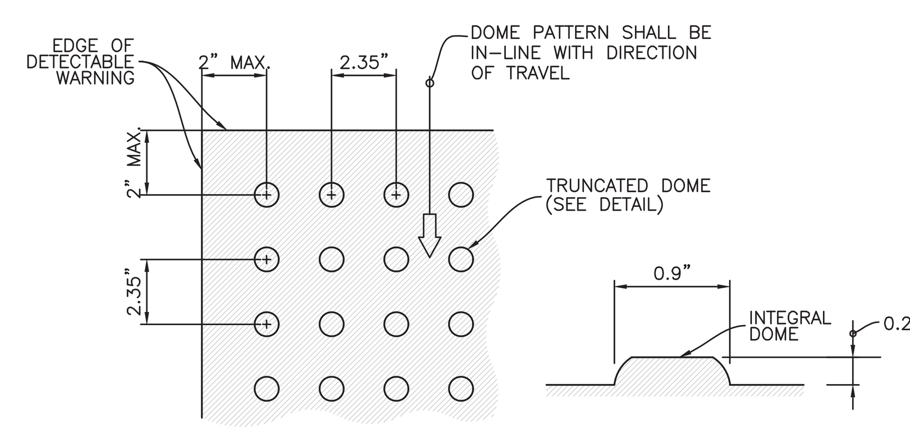

PLAN VIEW

TRUNCATED DOME

DETECTABLE WARNING DETAIL
N.T.S.

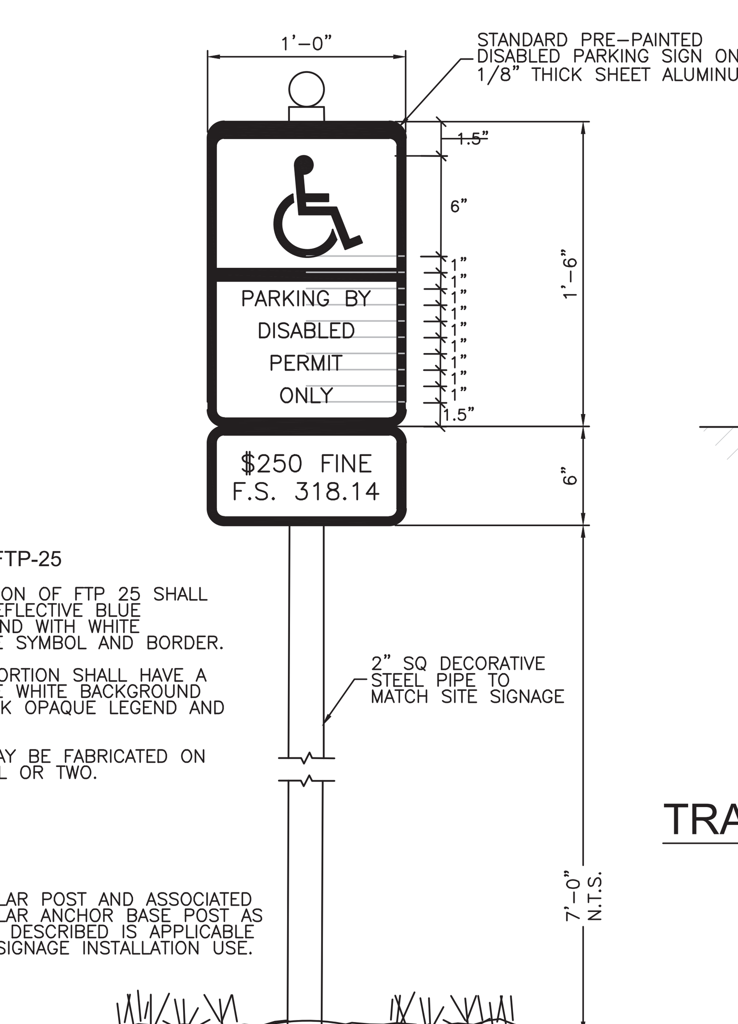

FTP-25
1. TOP PORTION OF FTP 25 SHALL HAVE A REFLECTIVE BLUE BACKGROUND WITH WHITE REFLECTIVE SYMBOL AND BORDER.
2. BOTTOM PORTION SHALL HAVE A REFLECTIVE WHITE BACKGROUND WITH BLACK OPAQUE LEGEND AND BORDER.
3. FTP 25 MAY BE FABRICATED ON ONE PANEL OR TWO.

NOTE:
SQUARE TUBULAR POST AND ASSOCIATED SQUARE TUBULAR ANCHOR BASE POST AS DEPICTED AND DESCRIBED IS APPLICABLE FOR TRAFFIC SIGNAGE INSTALLATION USE.

ACCESSIBLE PARKING SIGN DETAIL
N.T.S.

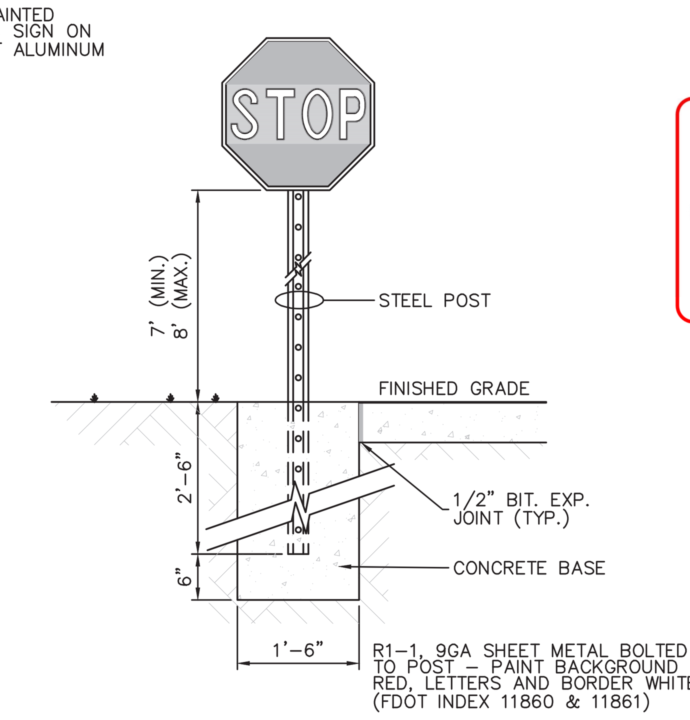

TRAFFIC SIGN MOUNTING DETAIL
N.T.S.

THE SCHOOL DISTRICT PALM BEACH COUNTY
Building Code Services
THIS DOCUMENT WAS REVIEWED FOR COMPLIANCE WITH ALL STATUTES, CODES, AND STANDARDS APPLICABLE TO PALM BEACH COUNTY SCHOOL DISTRICT FACILITIES.
THERE MAY BE ADDITIONAL CODE OR DISTRICT REQUIREMENTS NOT SHOWN ON THE PLANS. PLAN REVIEW DOES NOT RELIEVE THE BUILDER OR DESIGN PROFESSIONAL OF RECORD FROM FULL COMPLIANCE WITH ALL DISTRICT REQUIREMENTS AND APPLICABLE CODES.
BY: Rômulo Silva 01/20/2026

SAFETY IS IN YOUR HANDS. EVERY DIG. EVERY TIME.

PETER JOSEPH PELLERITO LICENSE No. 50063 STATE OF FLORIDA PROFESSIONAL ENGINEER

APPROVED : PETER J. PELLERITO, P.E.
FLA. REGISTRATION NO. 50063 DATE : 10/29/2025

GENERAL CONSTRUCTION DETAILS

REVISIONS

SDPBC HOPE CENTENNIAL ELEMENTARY
WEST PALM BEACH, FLORIDA
FOR: SCHOOL DISTRICT OF PALM BEACH COUNTY

MILLER LEGG
South Florida Office: 13680 NW 5th Street, Suite 200
Sunrise, Florida · 33325
954-436-7000
www.millerlegg.com

CERTIFICATE OF AUTHORIZATION:		
LB6680		
DES	DRWN	CHK
DES.	DWN.	CHK.

PROJECT / FILE NO. 24-00182
DRAWING NO. C3.1
DATE DRAWN: 12/23/24

V:\PROJECTS\2024\24-00182 - SDPBC HOPE CENTENNIAL\DRAWINGS\24-00182_CEO.DWG by CVAZQUEZ 7/9/2025 9:01:57 AM

BCS Received 01/20/2026 ID 31952

SDPBC PROJECT NO. 0012-2402

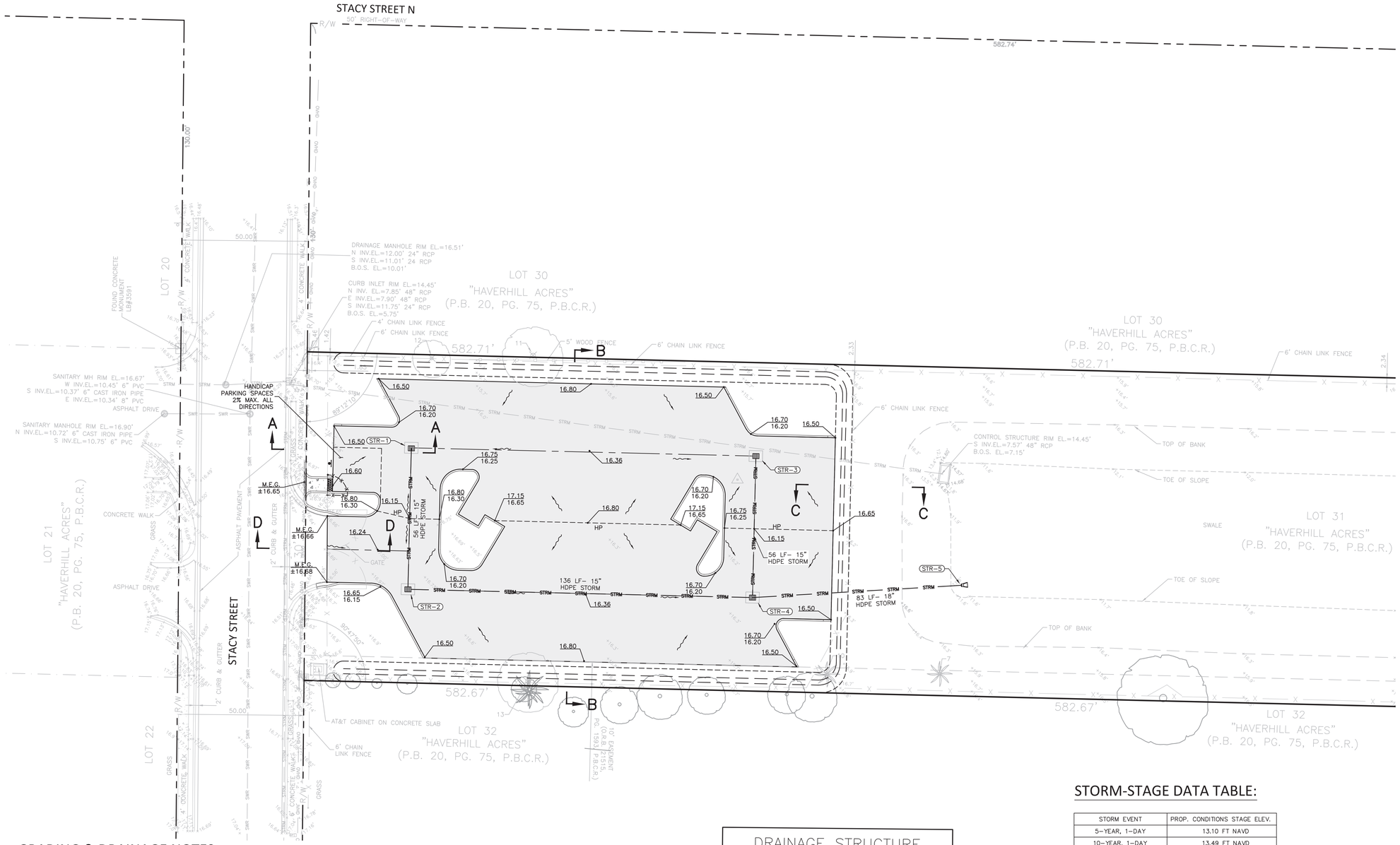

GRADING & DRAINAGE NOTES:

1. ALL EARTHWORK ACTIVITIES (CUT, FILL, DREDGING, ETC.) SHALL BE PERFORMED IN ACCORDANCE TO THE GEOTECHNICAL REPORT RECOMMENDATIONS.
2. CONTRACTOR TO OBTAIN A COPY OF THE GEOTECHNICAL REPORT AND MAINTAIN IT ON-SITE AT ALL TIMES.
3. EARTHWORK ACTIVITIES SHALL BE MONITORED AND PERFORMED UNDER CLOSE SUPERVISION OF THE GEOTECHNICAL ENGINEER AND FOLLOWING THE GEOTECHNICAL REPORT RECOMMENDATIONS FOR METHODOLOGY, PROCEDURES, COMPACTION, ETC.
4. NO CONSTRUCTION ACTIVITIES (EARTHWORK, UTILITIES, TREE REMOVAL, OR GROUND DISTURBANCE) TO TAKE PLACE OUTSIDE OF THE LIMITS OF CONSTRUCTION UNLESS OTHERWISE APPROVED BY THE SCHOOL DISTRICT OF PALM BEACH COUNTY.
5. CONTRACTOR SHALL FIELD VERIFY LOCATION, INVERT, ELEVATION, MATERIALS AND PIPE SIZE BEFORE CONSTRUCTION BEGINS.
6. PROPOSED SIDEWALKS SHALL NOT EXCEED 2% ACROSS AND 5% LONGITUDINAL.
7. ALL PROPOSED GRADES AND CONTOURS ARE TO EDGE OF PAVEMENT UNLESS OTHERWISE NOTED.
8. CONTRACTOR SHALL OBTAIN A COPY OF THE SITE GEOTECHNICAL REPORT AND INCLUDE ALL NECESSARY SOIL WORK IN THE PROJECT BID.
9. CONTRACTOR TO VERIFY SLOPES ON ALL SIDEWALKS, HANDICAP ZONES, RAMPS AND DRIVEWAY CONNECTIONS FOR COMPLIANCE WITH ADA REQUIREMENTS AND/OR OPERATIONAL FUNCTIONABILITY PRIOR TO POURING FINAL CONCRETE OR ASPHALT.
10. CONTRACTOR SHALL CONTACT ENGINEER OF RECORD AT LEAST 24 HOURS PRIOR TO POURING CONCRETE OR PLACING ASPHALT ON ALL DRIVEWAY/CURB CUT CONNECTIONS FOR ENGINEERING INSPECTIONS.
11. ALL RIGHT-OF-WAY DISTURBED BY THIS WORK SHALL BE RESTORED TO IT'S ORIGINAL CONDITION AND IN ACCORDANCE WITH APPLICABLE COUNTY CODES. ALL DISTURBED AREAS MUST BE SODDED, MATCHING EXISTING GRASS TYPE.
12. IF SHEETING, SHORING, OR DEWATERING, INCLUDING WELL POINTS ARE NECESSARY, THE CONTRACTOR MUST MONITOR AND CONTROL ALL WORK THAT MAY CAUSE CRACKING TO ANY ADJACENT BUILDING, STRUCTURE, OR PROPERTY AREA. THE CONTRACTOR SHALL BE RESPONSIBLE FOR ANY DAMAGES CAUSED BY THESE OPERATIONS. COST OF SHEETING, SHORING, OR DEWATERING SHALL BE INCLUDED IN THE RELATED BID ITEM FOR THE WORK BEING DONE.
13. THE CONTRACTOR IS RESPONSIBLE FOR KEEPING EXISTING AND NEW INLETS CLEAN OF MILLING MATERIAL, LIMEROCK, DEBRIS, ETC. DURING THE CONSTRUCTION AT NO ADDITIONAL COST TO THE OWNER. ALL LINES AND STRUCTURES SHALL BE CLEANED PRIOR TO FINAL INSPECTION AND ACCEPTANCE.
14. EXISTING DRAINAGE STRUCTURES WITHIN THE LIMITS OF CONSTRUCTION SHALL REMAIN UNLESS OTHERWISE NOTED.
15. EXISTING MANHOLES AND INLETS SCHEDULED TO REMAIN SHALL BE THOROUGHLY CLEANED BY REMOVING ALL DEBRIS AND SEDIMENTS, AND THE INTERIOR SHALL BE SEALED WITH AN APPROVED NON-TOXIC BITUMASTIC SEALANT.
16. PRIOR TO CONSTRUCTION THE CONTRACTOR WILL INSPECT ALL EXISTING STRUCTURES WHICH ARE TO REMAIN AND NOTIFY THE ENGINEER OF ANY OBVIOUS STRUCTURAL DEFICIENCIES.
17. CONTRACTOR SHALL ADJUST ALL EXISTING VALVES, CATCH BASINS, GRATES, AND STORM MANHOLE COVERS TO MEET NEW GRADES WHERE APPLICABLE.
18. WHERE NEW PAVEMENT MEETS EXISTING, CONNECTION SHALL BE MADE IN A NEAT STRAIGHT LINE AND FLUSH WITH THE EXISTING PAVEMENT.

SURVEY DATUM NOTE:

ELEVATIONS SHOWN ON THE PLANS ARE BASED ON THE NORTH AMERICAN VERTICAL DATUM OF 1988 (NAVD 88') OBTAINED FROM THE SURVEY PERFORMED BY MILLER LEGG & ASSOCIATES (PROJECT #24-00182), LAST REVISION DATED 10-31-24, RECEIVED 10-31-24.

DRAINAGE STRUCTURE TABULATION

STRUCTURE NUMBER	STRUCTURE TYPE	NORTHING & EASTING	STRUCTURE INFORMATION
STR-1	PROP. 3.5'x4' CB W/ FRAME & GRATE	N: 860392.14 E: 941654.31	RE=16.00 I.E.(E)=11.75
STR-2	PROP. 3.5'x4' CB W/ FRAME & GRATE	N: 860390.80 E: 941710.29	RE=16.00 I.E.(W)=11.75 I.E.(N)=11.75
STR-3	PROP. 3.5'x4' CB W/ FRAME & GRATE	N: 860528.40 E: 941657.58	RE=16.00 I.E.(E)=11.75
STR-4	PROP. 3.5'x4' CB W/ FRAME & GRATE	N: 860527.06 E: 941713.56	RE=16.00 I.E.(S)=11.75 I.E.(W)=11.75 I.E.(N)=11.75
STR-5	PROP. RCP MITERED END SECTION	N: 860609.72 E: 941708.71	T.O.P.=12.50 I.E.(S)=11.00

STORM-STAGE DATA TABLE:

STORM EVENT	PROP. CONDITIONS STAGE ELEV.
5-YEAR, 1-DAY	13.10 FT NAVD
10-YEAR, 1-DAY	13.49 FT NAVD
25-YEAR, 3-DAY	15.16 FT NAVD
100-YEAR, 3-DAY	16.22 FT NAVD

FLOOD MANAGEMENT INFORMATION TABLE:

FLOOD ZONE:	AE
BASE FLOOD ELEVATION:	15.70 NAVD
FEMA FIRM MAP No.:	12099C0559F EFFECTIVE 10/05/2017

Building Code Services

THIS DOCUMENT WAS REVIEWED FOR COMPLIANCE WITH ALL STATUTES, CODES, AND STANDARDS APPLICABLE TO PALM BEACH COUNTY SCHOOL DISTRICT FACILITIES.

THERE MAY BE ADDITIONAL CODE OR DISTRICT REQUIREMENTS NOT SHOWN ON THE PLANS. PLAN REVIEW DOES NOT RELIEVE THE BUILDER OR DESIGN PROFESSIONAL OF RECORD FROM FULL COMPLIANCE WITH ALL DISTRICT REQUIREMENTS AND APPLICABLE CODES.

BY: Rômulo Silva 01/20/2026

811 SAFETY IS IN YOUR HANDS. EVERY DIG. EVERY TIME.

PETER JOSEPH PELLERITO LICENSE No. 50063 STATE OF FLORIDA PROFESSIONAL ENGINEER

APPROVED : PETER J. PELLERITO, P.E.
FLA. REGISTRATION NO. 50063 DATE : 10/29/2025

REVISIONS

SDPBC HOPE CENTENNIAL ELEMENTARY

WEST PALM BEACH, FLORIDA
FOR: SCHOOL DISTRICT OF PALM BEACH COUNTY

SITE PAVING, GRADING, & DRAINAGE PLAN

MILLER LEGG
South Florida Office: 13680 NW 5th Street, Suite 200
Sunrise, FL 33325 954-435-7000
www.millerlegg.com

CERTIFICATE OF AUTHORIZATION: LB6680

DES	DRWN	CHK
DES.	DWN.	CHK.

PROJECT / FILE NO. 24-00182
DRAWING NO. C4.0
DATE DRAWN: 11/19/24

V:\PROJECTS\2024\24-00182 - SDPBC HOPE CENTENNIAL\DRAWINGS\24-00182_PGD.DWG by CVAZQUEZ 7/9/2025 9:00:07 AM

BCS Received 01/20/2026 ID 31952

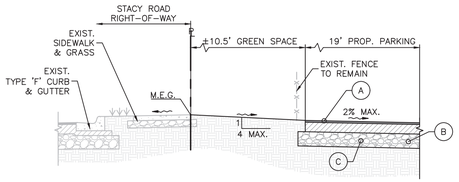

(A) 2" SP 9.5 ASPHALTIC CONCRETE INSTALLED IN TWO 1" LIFTS.

(B) 8" LIMEROCK BASE LBR-100 COMPACTED TO 98% MAX. DRY DENSITY PER AASHTO T-180.

(C) 12" STABILIZED SUBGRADE LBR-40 COMPACTED TO 98% MAX. DRY DENSITY PER AASHTO T-180.

NOTE: BERM FILL SOIL SHALL CONSIST OF INORGANIC, NON-PLASTIC SAND (AASHTO TYPE A-3 SOIL CLASSIFICATION), SHALL BE PLACED IN LOOSE LIFT THICKNESS OF NOT MORE THAN 12 INCHES & COMPACTED TO A MINIMUM OF 92% MAX. DRY DENSITY PER MODIFIED PROCTOR AASHTO T-180.

SECTION A-A

SCALE: 1" = 5'

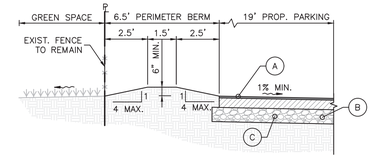

(A) 2" SP 9.5 ASPHALTIC CONCRETE INSTALLED IN TWO 1" LIFTS.

(B) 8" LIMEROCK BASE LBR-100 COMPACTED TO 98% MAX. DRY DENSITY PER AASHTO T-180.

(C) 12" STABILIZED SUBGRADE LBR-40 COMPACTED TO 98% MAX. DRY DENSITY PER AASHTO T-180.

NOTE: BERM FILL SOIL SHALL CONSIST OF INORGANIC, NON-PLASTIC SAND (AASHTO TYPE A-3 SOIL CLASSIFICATION), SHALL BE PLACED IN LOOSE LIFT THICKNESS OF NOT MORE THAN 12 INCHES & COMPACTED TO A MINIMUM OF 92% MAX. DRY DENSITY PER MODIFIED PROCTOR AASHTO T-180.

SECTION C-C

SCALE: 1" = 5'

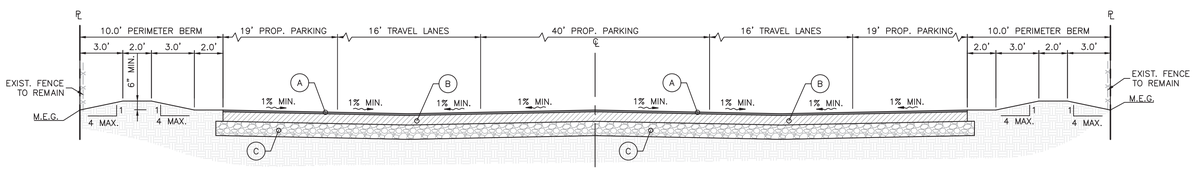

(A) 2" SP 9.5 ASPHALTIC CONCRETE INSTALLED IN TWO 1" LIFTS.

(B) 8" LIMEROCK BASE LBR-100 COMPACTED TO 98% MAX. DRY DENSITY PER AASHTO T-180.

(C) 12" STABILIZED SUBGRADE LBR-40 COMPACTED TO 98% MAX. DRY DENSITY PER AASHTO T-180.

NOTE: BERM FILL SOIL SHALL CONSIST OF INORGANIC, NON-PLASTIC SAND (AASHTO TYPE A-3 SOIL CLASSIFICATION), SHALL BE PLACED IN LOOSE LIFT THICKNESS OF NOT MORE THAN 12 INCHES & COMPACTED TO A MINIMUM OF 92% MAX. DRY DENSITY PER MODIFIED PROCTOR AASHTO T-180.

SECTION B-B

SCALE: 1" = 5'

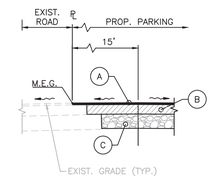

(A) 2" SP 9.5 ASPHALTIC CONCRETE INSTALLED IN TWO 1" LIFTS.

(B) 8" LIMEROCK BASE LBR-100 COMPACTED TO 98% MAX. DRY DENSITY PER AASHTO T-180.

(C) 12" STABILIZED SUBGRADE LBR-40 COMPACTED TO 98% MAX. DRY DENSITY PER AASHTO T-180.

SECTION D-D

SCALE: 1" = 5'

THIS DOCUMENT WAS REVIEWED FOR COMPLIANCE WITH ALL STATUTES, CODES, AND STANDARDS APPLICABLE TO PALM BEACH COUNTY SCHOOL DISTRICT FACILITIES.

THERE MAY BE ADDITIONAL CODE OR DISTRICT REQUIREMENTS NOT SHOWN ON THE PLANS. PLAN REVIEW DOES NOT RELIEVE THE BUILDER OR DESIGN PROFESSIONAL OF RECORD FROM FULL COMPLIANCE WITH ALL DISTRICT REQUIREMENTS AND APPLICABLE CODES.

Building Code Services

BY: Rômulo Silva 01/20/2026

SAFETY IS IN YOUR HANDS.
EVERY DIG. EVERY TIME.

PETER JOSEPH PELLERITO
LICENSE
No. 50063
STATE OF FLORIDA
PROFESSIONAL ENGINEER

APPROVED : PETER J. PELLERITO, P.E.
FLA. REGISTRATION NO. 50063 DATE : 10/29/2025

TYPICAL CROSS SECTIONS

NO.	DATE	REVISIONS	APPD.

SDPBC HOPE CENTENNIAL ELEMENTARY

WEST PALM BEACH, FLORIDA

FOR: SCHOOL DISTRICT OF PALM BEACH COUNTY

MILLER LEGG
South Florida Office: 13880 NW 5th Street, Suite 200
Sunrise, Florida 33325
954-436-7000
www.millerlegg.com

CERTIFICATE OF AUTHORIZATION: LB6680

DES	DRWN	CHK
DES.	DWN.	CHK.

PROJECT / FILE NO. 24-00182

DRAWING NO. C4.1

DATE DRAWN: 11/19/24

V:\PROJECTS\2024\24-00182 - SDPBC HOPE CENTENNIAL\DRAWINGS\24-00182_PGD.DWG by CVAZQUEZ 7/9/2025 9:00:07 AM

BCS Received 01/20/2026 ID 31952

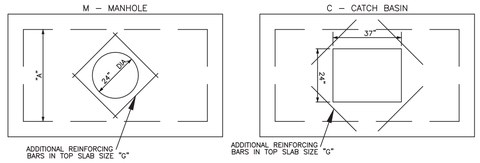

PLAN PLAN

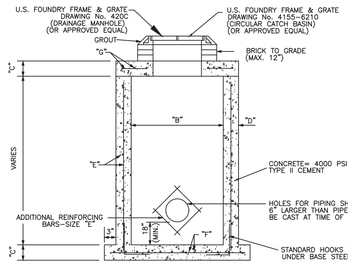

SECTION

"A"	"B"	"C"	"D"	"E" (GRADE 40 OR EQ.)	"F" (GRADE 40 OR EQ.)	"G" (GRADE 40 OR EQ.)
3'–6"	3'–6"	8"	6"	#4 @ 12" C.C.E.W.	#4 @ 9" C.C.E.W.	#4 @ 6" C.C.E.W.
4'–0"	4'–0"	8"	6"	#4 @ 12" C.C.E.W.	#4 @ 9" C.C.E.W.	#4 @ 6" C.C.E.W.
5'–0"	5'–0"	8"	8"	#4 @ 12" C.C.E.W.	#5 @ 12" C.C.E.W.	#5 @ 6" C.C.E.W.
6'–0"	6'–0"	8"	8"	#4 @ 12"V,#4 @ 6"H	#6 @ 12" C.C.E.W.	#6 @ 6" C.C.E.W.
8'–0"	8'–0"	10"	8"	#4 @ 12"V,#4 @ 6"H	#6 @ 12" C.C.E.W.	#6 @ 6" C.C.E.W.
10'–0"	10'–0"	10"	8"	#4 @ 12"V,#4 @ 6"H	#6 @ 6" C.C.E.W.	#7 @ 6" C.C.E.W.
3'–0"	4'–6"	8"	8"	#4 @ 12" C.C.E.W.	#4 @ 12" C.C.E.W.	#4 @ 6" C.C.E.W.
3'–6"	6'–0"	8"	8"	#4 @ 12"V,#4 @ 6"H	#5 @ 12" C.C.E.W.	#5 @ 6" C.C.E.W.
4'–0"	6'–0"	8"	8"	#4 @ 12"V,#4 @ 6"H	#5 @ 12" C.C.E.W.	#5 @ 6" C.C.E.W.
3'–6"	8'–0"	8"	8"	#4 @ 12"V,#4 @ 6"H	#5 @ 12" C.C.E.W.	#5 @ 6" C.C.E.W.
4'–0"	8'–0"	8"	8"	#4 @ 12"V,#4 @ 6"H	#5 @ 12" C.C.E.W.	#5 @ 6" C.C.E.W.
5'–0"	7'–0"	8"	8"	#4 @ 12"V,#4 @ 6"H	#5 @ 12" C.C.E.W.	#5 @ 6" C.C.E.W.
6'–0"	8'–0"	8"	8"	#4 @ 12"V,#4 @ 6"H	#6 @ 12" C.C.E.W.	#6 @ 6" C.C.E.W.
6'–0"	12'–0"	8"	8"	#4 @ 12"V,#4 @ 6"H	#6 @ 12" C.C.E.W.	#6 @ 6" C.C.E.W.

PRECAST RECTANGULAR CATCH BASIN AND/OR MANHOLE DETAIL

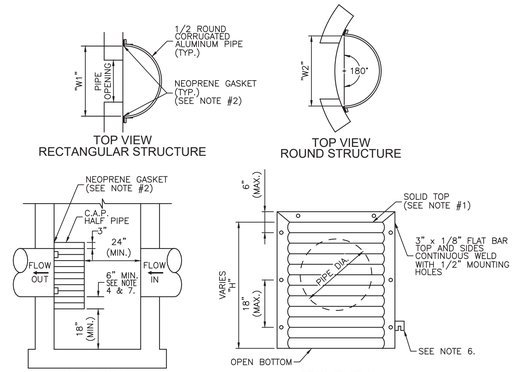

PIPE DIA.	W[1] (IN)	W[2] (IN)	T (GAUGE)	H (IN)
15"	21"	21"	16	VARIES
18"	24"	24"	16	VARIES
21"	30"	30"	16	VARIES
24"	30"	36"	16	VARIES
30"	36"	42"	14	VARIES
36"	42"	48"	14	VARIES
42"	48"	54"	14	VARIES
48"	54"	60"	14	VARIES
54"	60"	66"	14	VARIES

1. RECTANGULAR STRUCTURE
2. ROUND STRUCTURE

NOTES:
1. ALUMINUM SHEET OF SAME THICKNESS (GAUGE) AS PIPE SHALL BE WELDED TO CLOSE OPENING AT THE TOP.
2. NEOPRENE ADHESIVE BACKED GASKET, OR APPROVED EQUAL (1" x 2") SHALL BE INSTALLED ON THE SIDES AND TOP OF ALL BAFFLES.
3. POLLUTION RETARDANT BAFFLE TO BE FASTENED IN PLACE WITH 3/8"x4" STAINLESS STEEL "RED HEADS", OR APPROVED EQUAL.
4. ALL EXFILTRATION TRENCHES SHALL HAVE A POLLUTION RETARDANT BAFFLE AT EACH CONNECTION POINT TO A STRUCTURE (SEE EXFILTRATION TRENCH DETAIL). THE BOTTOM OF THE BAFFLE SHALL BE A MINIMUM OF 6" BELOW THE CONNECTING PIPE INVERT (SEE EXFILTRATION TRENCH DETAIL).
5. BOTTOM OF DRAINAGE STRUCTURE SHALL BE A MINIMUM OF 18" BELOW BOTTOM OF THE POLLUTION RETARDANT BAFFLE (SEE EXFILTRATION TRENCH DETAIL).
6. FIBER GLASS BAFFLES ARE NOT PERMITTED.
7. MOUNTING BRACKETS MAY BE ADDED TO FLAT BARS TO EASE INSTALLATION IN ROUND STRUCTURES. SPACING TO MATCH HOLES IN FLAT BARS.

POLLUTION RETARDANT BAFFLE DETAIL

N.T.S.

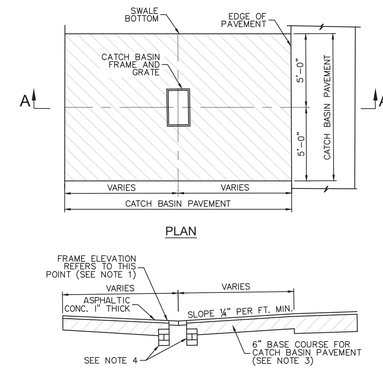

SECTION A-A

NOTES:
1. FRAME ELEVATION SHALL BE AT LEAST 3" BELOW SWALE GRADE ELEVATIONS AS SHOWN ON DETAILS R–11 THRU R–81.
2. FRAME ELEVATION SHALL BE AT LOW POINT OF CATCH BASIN PAVEMENT.
3. 6" CONCRETE SLAB MAY BE SUBSTITUTED FOR 6" BASE COURSE. REINFORCING STEEL TO BE APPROVED BY PUBLIC WORKS DEPARTMENT.
4. A SMOOTH LINE OF MORTAR ½" THICK INSIDE AND OUTSIDE.

CATCH BASIN PAVEMENT

N.T.S.

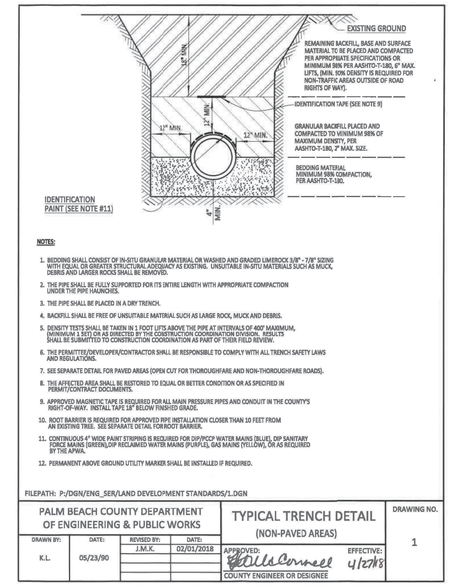

NOTES:
1. BEDDING SHALL CONSIST OF IN-SITU GRANULAR MATERIAL OR WASHED AND GRADED LIMEROCK 3/8" - 7/8" SIZING WITH EQUAL OR GREATER STRUCTURAL ADEQUACY AS EXISTING. UNSUITABLE IN-SITU MATERIALS SUCH AS MUCK, DEBRIS AND LARGER ROCKS SHALL BE REMOVED.
2. THE PIPE SHALL BE FULLY SUPPORTED FOR ITS ENTIRE LENGTH WITH APPROPRIATE COMPACTION UNDER THE PIPE HAUNCHES.
3. THE PIPE SHALL BE PLACED IN A DRY TRENCH.
4. BACKFILL SHALL BE FREE OF UNSUITABLE MATERIAL SUCH AS LARGE ROCK, MUCK AND DEBRIS.
5. DENSITY TESTS SHALL BE TAKEN IN 1 FOOT LIFTS ABOVE THE PIPE AT INTERVALS OF 400' MAXIMUM, (MINIMUM 1 SET) OR AS DIRECTED BY THE CONSTRUCTION COORDINATION DIVISION. RESULTS SHALL BE SUBMITTED TO CONSTRUCTION COORDINATION AS PART OF THEIR FIELD REVIEW.
6. THE PERMITTEE/DEVELOPER/CONTRACTOR SHALL BE RESPONSIBLE TO COMPLY WITH ALL TRENCH SAFETY LAWS AND REGULATIONS.
7. SEE SEPARATE DETAIL FOR PAVED AREAS (OPEN CUT FOR THOROUGHFARE AND NON-THOROUGHFARE ROADS).
8. THE AFFECTED AREA SHALL BE RESTORED TO EQUAL OR BETTER CONDITION OR AS SPECIFIED IN PERMIT/CONTRACT DOCUMENTS.
9. APPROVED MAGNETIC TAPE IS REQUIRED FOR ALL MAIN PRESSURE PIPES AND CONDUIT IN THE COUNTY'S RIGHT-OF-WAY. INSTALL TAPE 18" BELOW FINISHED GRADE.
10. ROOT BARRIER IS REQUIRED FOR APPROVED RPZ INSTALLATION CLOSER THAN 10 FEET FROM AN EXISTING TREE. SEE SEPARATE DETAIL FOR ROOT BARRIER.
11. CONTINUOUS 4" WIDE PAINT STRIPING IS REQUIRED FOR DIP/PCCP WATER MAINS (BLUE), DIP SANITARY FORCE MAINS (GREEN),DIP RECLAIMED WATER MAINS (PURPLE), GAS MAINS (YELLOW), OR AS REQUIRED BY THE APWA.
12. PERMANENT ABOVE GROUND UTILITY MARKER SHALL BE INSTALLED IF REQUIRED.

FILEPATH: P:/DGN/ENG_SER/LAND DEVELOPMENT STANDARDS/1.DGN

PALM BEACH COUNTY DEPARTMENT OF ENGINEERING & PUBLIC WORKS			TYPICAL TRENCH DETAIL (NON-PAVED AREAS)	DRAWING NO.
DRAWN BY: K.L.	DATE: 05/23/90	REVISED BY: J.M.K.	DATE: 02/01/2018	1
		APPROVED: COUNTY ENGINEER OR DESIGNEE	EFFECTIVE: 4/27/18	

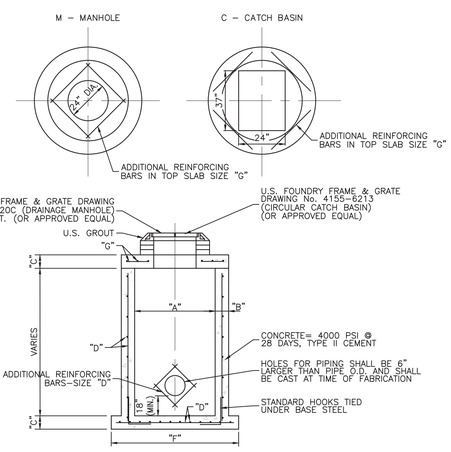

SECTION

MANHOLE	CATCH BASIN	"A"	"B"	"C"	"D"	"E" (GRADE 40 OR EQ.)	"F"	"G" (GRADE 40 OR EQ.)
M4	C4	4'–0"	6"	8"	ASTM C–478	#4 @ 12" C.C.E.W.	6'–0" DIA	#4 @ 6" C.C.E.W.
M5	C5	5'–0"	8"	8"	ASTM C–478	#5 @ 12" C.C.E.W.	7'–4" DIA	#5 @ 8" C.C.E.W.
M6	C6	6'–0"	8"	8"	ASTM C–478	#5 @ 6" C.C.E.W.	8'–4" DIA	#5 @ 6" C.C.E.W.
M7	C7	7'–0"	8"	8"	ASTM C–478	#5 @ 6" C.C.E.W.	9'–4" DIA	#5 @ 6" C.C.E.W.
M8	C8	8'–0"	10"	10"	ASTM C–478	#5 @ 6" C.C.E.W.	10'–8" DIA	#6 @ 6" C.C.E.W.
M10	C10	10'–0"	12"	12"	ASTM C–478	#5 @ 6" C.C.E.W.	12'–0" SQ	#6 @ 6" C.C.E.W.

PRECAST CIRCULAR CATCH BASIN AND MANHOLE DETAIL

N.T.S.

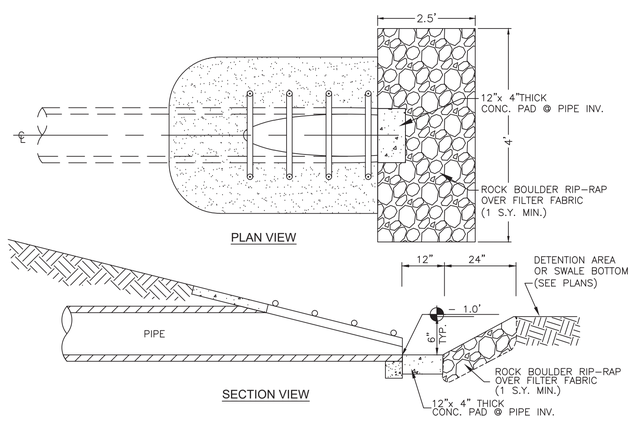

MITERED END SECTION SUMP DETAIL

N.T.S.

DIMENSIONS AND QUANTITIES

	D	A	B	C	E	F	G	M SINGLE PIPE	M DOUBLE PIPE	M TRIPLE PIPE	M QUAD. PIPE
2:1 SLOPE	15"	1.92'	2.18'	4.10'	2.06'	5'	1.22'	4.63'	7.21'	9.79'	12.37'
	18"	1.97'	2.74'	4.71'	2.56'	6'	1.41'	4.92'	7.75'	10.58'	13.42'
	24"	2.06'	3.85'	5.91'	3.56'	7'	1.73'	5.50'	8.92'	12.33'	15.75'
	30"	2.15'	4.95'	7.10'	4.56'	8'	2.00'	6.08'	10.33'	14.58'	18.83'
	36"	2.25'	6.08'	8.33'	5.56'	9'	2.24'	6.67'	11.75'	16.83'	21.92'
	42"	2.34'	7.21'	9.50'	6.56'	10'	2.45'	7.25'	13.25'	19.25'	25.25'
	48"	2.43'	8.33'	10.76'	7.56'	11'	2.65'	7.83'	14.58'	21.33'	28.08'
	54"	2.52'	9.44'	11.96'	8.56'	12'	2.83'	8.42'	16.08'	23.75'	31.42'
	60"	2.62'	10.56'	13.18'	9.56'	14'	3.00'	9.00'	17.50'	26.00'	34.50'
	66"	2.71'	11.68'	14.39'	10.56'	15'	3.18'	9.58'	18.75'	27.92'	37.08'
	72"	2.80'	12.80'	15.60'	11.56'	16'	3.30'	10.16'	20.16'	30.16'	40.16'
4:1 SLOPE	15"	2.27'	4.09'	6.36'	4.03'	8'	1.22'	4.63'	7.21'	9.79'	12.37'
	18"	2.36'	5.12'	7.48'	5.03'	9'	1.41'	4.92'	7.75'	10.58'	13.42'
	24"	2.53'	7.18'	9.71'	7.03'	11'	1.73'	5.50'	8.92'	12.33'	15.75'
	30"	2.70'	9.25'	11.95'	9.03'	13'	2.00'	6.08'	10.33'	14.58'	18.83'
	36"	2.87'	11.31'	14.18'	11.03'	15'	2.24'	6.67'	11.75'	16.83'	21.92'
	42"	3.05'	13.37'	16.42'	13.03'	17'	2.45'	7.25'	13.25'	19.25'	25.25'
	48"	3.22'	15.43'	18.65'	15.03'	19'	2.65'	7.83'	14.58'	21.33'	28.08'
	54"	3.39'	17.49'	20.88'	17.03'	21'	2.83'	8.42'	16.08'	23.75'	31.42'
	60"	3.56'	19.55'	23.11'	19.03'	23'	3.00'	9.00'	17.50'	26.00'	34.50'
	66"	3.73'	21.62'	25.35'	21.03'	25'	3.18'	9.58'	18.75'	27.92'	37.08'
	72"	3.91'	22.68'	26.59'	23.03'	27'	3.30'	10.16'	20.16'	30.16'	40.16'

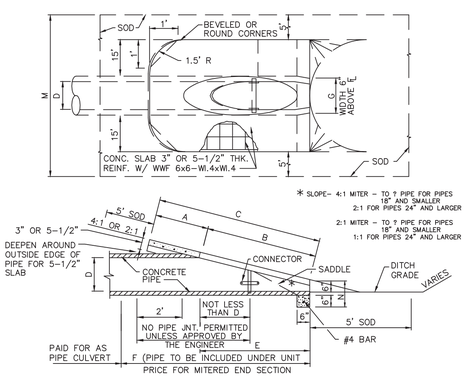

SECTION

R.C.P. MITERED END SECTION

F.D.O.T. INDEX NO. 272

Building Code Services

THIS DOCUMENT WAS REVIEWED FOR COMPLIANCE WITH ALL STATUTES, CODES, AND STANDARDS APPLICABLE TO PALM BEACH COUNTY SCHOOL DISTRICT FACILITIES.

THERE MAY BE ADDITIONAL CODE OR DISTRICT REQUIREMENTS NOT SHOWN ON THE PLANS. PLAN REVIEW DOES NOT RELIEVE THE BUILDER OR DESIGN PROFESSIONAL OF RECORD FROM FULL COMPLIANCE WITH ALL DISTRICT REQUIREMENTS AND APPLICABLE CODES.

BY: Rômulo Silva 01/20/2026

811 SAFETY IS IN YOUR HANDS. EVERY DIG. EVERY TIME.

PETER JOSEPH PELLERITO LICENSED No. 50063 STATE OF FLORIDA PROFESSIONAL ENGINEER

APPROVED : PETER J. PELLERITO, P.E.
FLA. REGISTRATION NO. 50063 DATE : 10/29/2025

REVISIONS

SDPBC HOPE CENTENNIAL ELEMENTARY

WEST PALM BEACH, FLORIDA
FOR: SCHOOL DISTRICT OF PALM BEACH COUNTY

MILLER LEGG
South Florida Office: 13680 NW 5th Street, Suite 200
Sunrise, Florida 33325
954-436-7000
www.millerlegg.com

CERTIFICATE OF AUTHORIZATION: LB6680

DES	DRWN	CHK

PROJECT / FILE NO. 24–00182
DRAWING NO. C4.2
DATE DRAWN 11/19/24

DRAINAGE DETAILS

BCS Received 01/20/2026 ID 31952

V:\PROJECTS\2024\24–00182 – SDPBC HOPE CENTENNIAL\DRAWINGS\24–00182_PGD.DWG by CVAZQUEZ 7/9/2025 9:00:07 AM

SDPBC PROJECT NO. 0012-2402

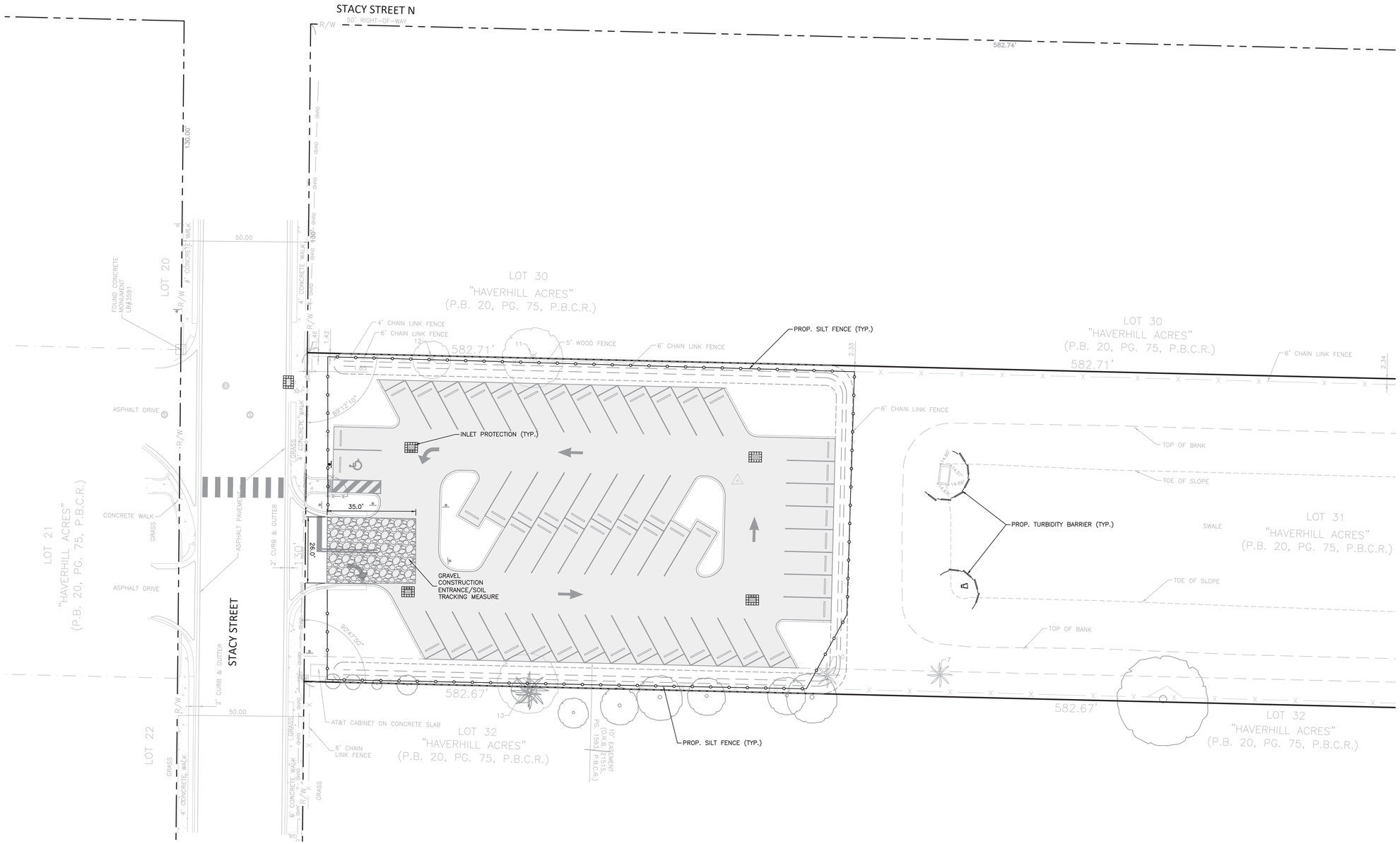

GRAPHIC SCALE
0 10 20 40
(IN FEET)
1 INCH = 20 FEET

EROSION CONTROL & CONSTRUCTION ENTRANCE NOTES:

1. SILT FENCES ARE TO BE REMOVED ONLY AFTER EARTHWORK ACTIVITIES ARE COMPLETED AND SEEDING AND MULCHING HAS TAKEN PLACE.
2. SILT FENCES ALONG WETLAND BUFFERS ARE TO REMAIN IN PLACE FOR AT LEAST 120 DAYS AFTER CONSTRUCTION ACTIVITIES HAVE SEIZED.
3. SOD ALL DISTURBED OR NEWLY CREATED LAKE BANKS AS PER LANDSCAPE AND IRRIGATION SPECIFICATIONS.
4. TURBIDITY CONTROL BARRIERS SHALL BE INSTALLED WITHIN EXISTING LAKES, EXISTING CANALS, ALONG ALL DISTURBED SHORELINES AND WHERE EARTHWORK.(FILL/CUT AND/OR DREDGING) ACTIVITIES ARE TO TAKE PLACE.
5. SILT FENCE ARE TO BE SETBACK AS FOLLOWS:
   –5' FROM FACES OF WALLS/FOOTINGS
   –5' FROM PROPERTY LINES
   –5' FROM WETLAND BUFFERS (EXCEPT WHERE A PROPOSED BUFFER OR WETLAND ENCROACHMENT IS SPECIFIED)
   –5' BEYOND LIMITS OF EARTHWORK (FILL/CUT) OR GRADING ACTIVITIES.
6. ALL EROSION AND SEDIMENT CONTROL WORK SHALL CONFORM WITH LOCAL CITY/COUNTY AND WATER MANAGEMENT DISTRICT SPECIFICATIONS, SUBJECT TO AUTHORIZED AND APPROVED VARIANCES, WAIVERS AND/OR CONDITIONAL CHANGES.
7. EROSION AND SEDIMENT CONTROL MEASURES SHALL BE PLACED PRIOR TO OR AS THE FIRST STEP IN, CONSTRUCTION. SEDIMENT CONTROL PRACTICES WILL BE APPLIED AS A PERIMETER DEFENSE AGAINST ANY TRANSPORTATION OF SILT OFF THE SITE.
8. CONTRACTOR SHALL KEEP ANY AND ALL SAND, SILT OR OTHER DEBRIS FROM MOVING OFF–SITE. USE AND MAINTAIN SILT FENCE JUST INSIDE OF PROPERTY LINE.
9. CONTRACTOR SHALL BLOCK INTRUSION OF SAND, SILT OR OTHER DEBRIS INTO ANY DRAINAGE OR SANITARY SEWER STRUCTURE OR PIPING ON OR ADJACENT TO SITE.
10. ALL CLEARED AREAS FOR IMPROVEMENT AND/OR CONSTRUCTION SHALL BE WATERED TO PREVENT WIND EROSION.
11. ALL AREAS AFFECTED BY THIS WORK SHALL BE RESTORED TO A CONDITION EQUAL TO OR BETTER THAN EXISTING CONDITION, UNLESS SPECIFICALLY EXEMPTED BY THE PLANS. THE COST FOR SUCH RESTORATION SHALL BE INCIDENTAL TO OTHER CONSTRUCTION AND NO ADDITIONAL COMPENSATION SHALL BE ALLOWED.
12. THE CONTRACTOR SHALL IMMEDIATELY NOTIFY THE ENGINEER OF ANY DISCREPANCIES BETWEEN THESE PLANS AND FIELD CONDITIONS PRIOR TO CONSTRUCTION.
13. PRIOR TO CONSTRUCTION THE CONTRACTOR SHALL PROVIDE TREE PROTECTION BARRIERS TO MEET THE REQUIREMENTS OF LOCAL SPECIFICATIONS.
14. THE CONTRACTOR SHALL SELECTIVELY CLEAR ONLY THE ARES REQUIRED FOR CONSTRUCTION AND STABILIZE ANY POTENTIAL EROSION AREAS IMMEDIATELY FOLLOWING COMPLETION OF CONSTRUCTION.
15. CONTRACTOR IS REQUIRED BY NPDES TO KEEP A LOG ON SITE FOR THE SOIL EROSION AND SEDIMENT CONTROL MEASURES INDICATED ON THE PLAN. THE LOG SHALL CONTAIN DATES FOR: INSTALLATION OF CONTROL MEASURES, MAJOR SITE CONSTRUCTION ACTIVITIES, INSPECTION ON AT LEAST A WEEKLY BASIS AND INSPECTION AFTER ANY RAINFALL EVENT THAT IS 1/2" OR GREATER.
16. THE ENTRANCE SHALL BE MAINTAINED IN A CONDITION THAT WILL PREVENT TRACKING OR FLOWING OF SEDIMENT ONTO PUBLIC RIGHTS–OF–WAY. THIS MAY REQUIRE TOP DRESSING, REPAIR AND/OR CLEAN OUT OF ANY MEASURES USED TO TRAP SEDIMENT.
17. WHEN NECESSARY, WHEELS SHALL BE CLEANED PRIOR TO ENTRANCE ONTO PUBLIC RIGHT–OF–WAY.
18. WHEN WASHING IS REQUIRED, IT SHALL BE DONE ON AN AREA STABILIZED WITH CRUSHED STONE THAT DRAINS INTO AN APPROVED SEDIMENT TRAP OR SEDIMENT BASIN.
19. ALL EROSION CONTROL MATERIALS, CONSTRUCTION & MAINTENANCE TO BE PER APPLICABLE SECTIONS OF FDOT STANDARD SPECIFICATION #104.
20. USE SANDBAGS, SYNTHETIC BALES OR OTHER APPROVED METHODS TO CHANNELIZE RUNOFF TO BASIN REQUIRED.
21. COURSE AGGREGATE & FILTER FABRIC TO PER SECTIONS OF FDOT STANDARD SPECIFICATION #901 & #985 RESPECTIVELY.
22. CONTRACTOR TO FOLLOW SILT FENCE INSTALLATION PHASING PER SWPPP.

SURVEY DATUM NOTE:

ELEVATIONS SHOWN ON THE PLANS ARE BASED ON THE NORTH AMERICAN VERTICAL DATUM OF 1988 (NAVD 88') OBTAINED FROM THE SURVEY PERFORMED BY MILLER LEGG & ASSOCIATES (PROJECT #24–00182), LAST REVISION DATED 10–31–24, RECEIVED 10–31–24.

SAFETY IS IN YOUR HANDS. EVERY DIG. EVERY TIME.

Building Code Services
THIS DOCUMENT WAS REVIEWED FOR COMPLIANCE WITH ALL STATUTES, CODES, AND STANDARDS APPLICABLE TO PALM BEACH COUNTY SCHOOL DISTRICT FACILITIES.
THERE MAY BE ADDITIONAL CODE OR DISTRICT REQUIREMENTS NOT SHOWN ON THE PLANS. PLAN REVIEW DOES NOT RELIEVE THE BUILDER OR DESIGN PROFESSIONAL OF RECORD FROM FULL COMPLIANCE WITH ALL DISTRICT REQUIREMENTS AND APPLICABLE CODES.
BY: Rômulo Silva 01/20/2026

PETER JOSEPH PELLERITO
LICENSE
No. 50063
STATE OF FLORIDA
PROFESSIONAL ENGINEER

APPROVED : PETER J. PELLERITO, P.E.
FLA. REGISTRATION NO. 50063 DATE : 10/29/2025

REVISIONS

SDPBC HOPE CENTENNIAL ELEMENTARY
WEST PALM BEACH, FLORIDA
FOR: SCHOOL DISTRICT OF PALM BEACH COUNTY

STORMWATER POLLUTION PREVENTION PLAN

MILLER LEGG
South Florida Office: 13680 NW 5th Street, Suite 200
Sunrise, FL 33325
954-436-7000
www.millerlegg.com

CERTIFICATE OF AUTHORIZATION: LB6680

DES	DRWN	CHK
DES.	DWN.	CHK.

PROJECT / FILE NO. 24–00182
DRAWING NO. C5.0
DATE DRAWN 11/19/24

V:\PROJECTS\2024\24-00182 – SDPBC HOPE CENTENNIAL\DRAWINGS\24-00182_SWPP.DWG by CVAZQUEZ 7/9/2025 8:56:04 AM

BCS Received 01/20/2026 ID 31952

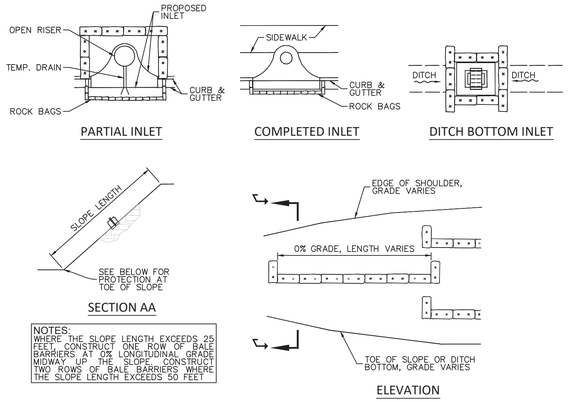

NOTES:
WHERE THE SLOPE LENGTH EXCEEDS 25 FEET, CONSTRUCT ONE ROW OF BALE BARRIERS AT 0% LONGITUDINAL GRADE MIDWAY UP THE SLOPE. CONSTRUCT TWO ROWS OF BALE BARRIERS WHERE THE SLOPE LENGTH EXCEEDS 50 FEET

ALONG FILL SLOPE

PROTECTION AROUND INLETS OR SIMILAR STRUCTURES

N.T.S.

NOTES FOR BAILED HAY OR STRAW BARRIERS

1. TYPE I AND II SYNTHETIC BARRIER SHOULD BE SPACED IN CORACLE WITH CHART I, SHEET I PER INDEX 102 OF THE 2010 FDOT DESIGN STANDARDS.
2. BALES SHALL BE ANCHORED WITH 2-1" x 2" (OR 1" DIA.) x 4' WOOD STAKES, STAKES OF OTHER MATERIAL OR SHAPE PROVIDING EQUIVALENT STRENGTH MAY BE USED IF APPROVED BY THE ENGINEER. STAKES OTHER THAN WOOD SHALL BE REMOVED UPON COMPLETION OF THE PROJECT.
3. RAILS AND POSTS SHALL BE 2"x4" WOOD. OTHER MATERIALS PROVIDING EQUIVALENT STRENGTH MAY BE USED IF APPROVED BY THE ENGINEER.
4. ADJACENT BALES SHALL BE BUTTED FIRMLY TOGETHER.
5. WHERE USED IN CONJUNCTION WITH SILT FENCE, BALES SHALL BE PLACED ON THE UPSTREAM SIDE OF THE FENCE.

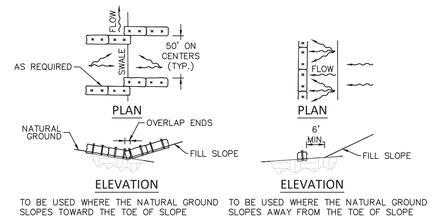

TO BE USED WHERE THE NATURAL GROUND SLOPES TOWARD THE TOE OF SLOPE

TO BE USED WHERE THE NATURAL GROUND SLOPES AWAY FROM THE TOE OF SLOPE

AT TOE OF SLOPE

BARRIERS FOR FILL SLOPES

N.T.S.

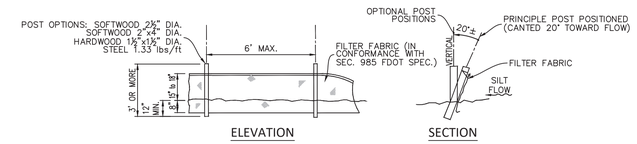

SWPPP-DETAILS
N.T.S.

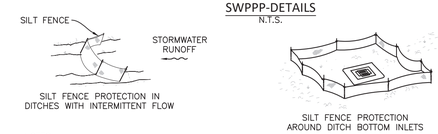

NOTES

1. SPACING FOR TYP III FENCE TO BE IN ACCORDANCE WITH CHART 1, SHEET 1 OF 3 AND DITCH INSTALLATIONS OF DRAINAGE STRUCTURES SHEET 2 OF 3 PER 2010 FDOT DESIGN STANDARDS INDEX 102.
2. DO NOT DEPLOY IN A MANNER THAT SILT FENCES WILL ACT AS A DAM ACROSS PERMANENT FLOWING WATERCOURSES. SILT FENCES ARE TO BE USED AT UPLAND LOCATIONS AND TURBIDITY BARRIERS USED AT PERMANENT BODIES OF WATER

SILT FENCE DETAILS

N.T.S.

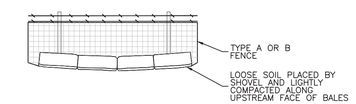

BALES BACKED BY FENCE

N.T.S.

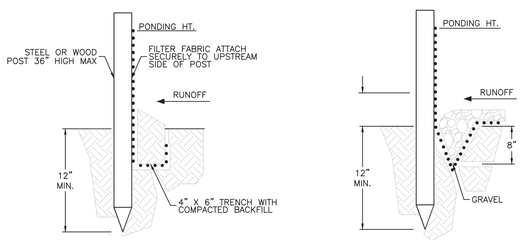

STANDARD DETAIL
N.T.S.
TRENCH WITH NATIVE BACKFILL

ALTERNATE DETAIL
N.T.S.
TRENCH WITH GRAVEL

NOTES:

1. INSPECT AND REPAIR FENCE AFTER EACH STORM EVENT AND REMOVE SEDIMENT WHEN NECESSARY.
2. REMOVED SEDIMENT SHALL BE DEPOSITED TO AN AREA THAT WILL NOT CONTRIBUTE SEDIMENT OFF-SITE AND CAN BE PERMANENTLY STABILIZED.
3. SILT FENCE SHALL BE PLACED ON SLOPE CONTOURS TO MAXIMIZE PONDING EFFICIENCY.

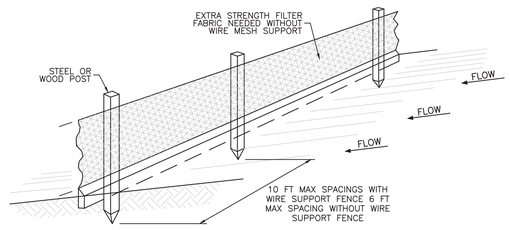

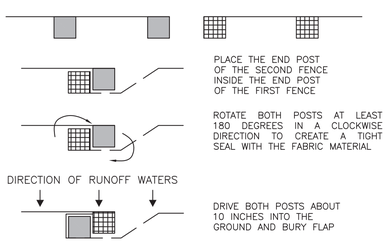

SILT FENCE ATTACHMENT DETAIL

N.T.S.

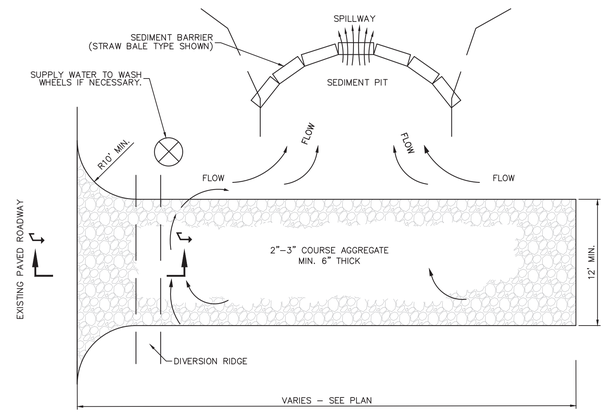

PLAN
N.T.S.

NOTE:
USE SANDBAGS, STRAW BALES OR OTHER APPROVED METHODS TO CHANNELIZE RUNOFF TO BASIN AS REQUIRED.

NOTES:

1. THE ENTRANCE SHALL BE MAINTAINED IN A CONDITION THAT WILL PREVENT TRACKING OR FLOWING OF SEDIMENT ONTO PUBLIC RIGHTS-OF-WAY. THIS MAY REQUIRE TOP DRESSING, REPAIR AND/OR CLEANOUT OF ANY MEASURES USED TO TRAP SEDIMENT.
2. WHEN NECESSARY, WHEELS SHALL BE CLEANED PRIOR TO ENTRANCE ONTO PUBLIC RIGHT-OF-WAY.
3. WHEN WASHING IS REQUIRED, IT SHALL BE DONE ON AN AREA STABILIZED WITH CRUSHED STONE THAT DRAINS INTO AN APPROVED SEDIMENT TRAP OR SEDIMENT BASIN.

SOIL TRACKING MEASURES (TEMPORARY CONSTRUCTION ENTRANCE)

N.T.S.

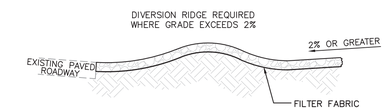

SECTION `A - A'
N.T.S.

GENERAL NOTES

TEMPORARY ACCESS ROADS AND PARKING AREAS:

1. TEMPORARY ROADS SHALL FOLLOW THE CONTOUR OF THE NATURAL TERRAIN TO THE EXTENT POSSIBLE. SLOPES SHOULD NOT EXCEED 10 PERCENT.
2. TEMPORARY PARKING AREAS SHOULD BE LOCATED ON NATURALLY FLAT AREAS TO MINIMIZE GRADING. GRADES SHOULD BE SUFFICIENT TO PROVIDE DRAINAGE BUT SHOULD NOT EXCEED 4 PERCENT.
3. ROADBEDS SHALL BE AT LEAST 14 FEET (5.5 m) WIDE FOR ONE-WAY TRAFFIC AND 20 FEET (8 m) WIDE FOR TWO-WAY TRAFFIC.
4. ALL CUTS AND FILLS SHALL HAVE SIDE SLOPES THAT ARE STABLE FOR THE PARTICULAR SOIL. SLOPES OF 2:1 OR FLATTER ARE RECOMMENDED FOR CLAY SOILS, AND SLOPES OF 3:1 OR FLATTER ARE RECOMMENDED FOR SANDY SOILS.
5. STORMWATER SYSTEM SHALL BE PROVIDED AS NEEDED AND SHALL BE DESIGNED AND CONSTRUCTED ACCORDING TO APPLICABLE REGULATIONS.
6. THE ROADBED OR PARKING SURFACE SHALL BE CLEARED OF ALL VEGETATION, ROOTS, AND OTHER OBJECTIONABLE MATERIAL.
7. A 6 INCH (15 cm) COURSE OF FDOT NO. 1 AGGREGATE SHALL BE APPLIED IMMEDIATELY AFTER GRADING OR THE COMPLETION OF UTILITY INSTALLATION WITHIN THE RIGHT-OF-WAY AND/OR SITE. FILTER FABRIC MAY BE APPLIED TO THE ROADBED FOR ADDITIONAL STABILITY ACCORDING TO THE FABRIC MANUFACTURER'S SPECIFICATIONS, IF NECESSARY PER UNDERLYING SOILS CONDITION AND CONSTRUCTION NEEDS.

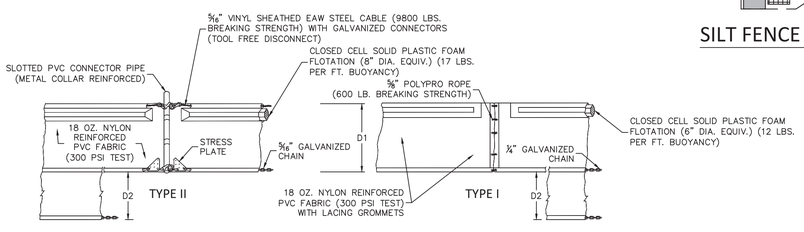

D1=5' STD. (SINGLE PANEL FOR DEPTHS 5' OR LESS).
D2=5' STD. (ADDITIONAL PANEL FOR DEPTHS > 5').
CURTAIN TO REACH BOTTOM UP TO DEPTHS OF 10 FEET.
TWO(2) PANELS TO BE USED FOR DEPTHS GREATER THAN 10 FEET UNLESS SPECIAL DEPTH CURTAINS SPECIFICALLY CALLED FOR IN THE PLANS OR AS DETERMINED BY THE ENGINEER.

NOTICE:
COMPONENTS OF TYPES I AND II MAY BE SIMILAR OR IDENTICAL TO PROPRIETARY DESIGNS. ANY INFRINGEMENT ON THE PROPRIETARY RIGHTS OF THE DESIGNER SHALL BE THE SOLE RESPONSIBILITY OF THE USER. SUBSTITUTIONS FOR TYPES I AND II SHALL BE AS APPROVED BY THE ENGINEER.

FLOATING TURBIDITY BARRIER

N.T.S.

THIS DOCUMENT WAS REVIEWED FOR COMPLIANCE WITH ALL STATUTES, CODES, AND STANDARDS APPLICABLE TO PALM BEACH COUNTY SCHOOL DISTRICT FACILITIES.

THERE MAY BE ADDITIONAL CODE OR DISTRICT REQUIREMENTS NOT SHOWN ON THE PLANS. PLAN REVIEW DOES NOT RELIEVE THE BUILDER OR DESIGN PROFESSIONAL OF RECORD FROM FULL COMPLIANCE WITH ALL DISTRICT REQUIREMENTS AND APPLICABLE CODES.

Building Code Services

BY: Rômulo Silva 01/20/2026

SAFETY IS IN YOUR HANDS. EVERY DIG. EVERY TIME.

PETER JOSEPH PELLERITO LICENSE No. 50063 STATE OF FLORIDA PROFESSIONAL ENGINEER

APPROVED : PETER J. PELLERITO, P.E.
FLA. REGISTRATION NO. 50063 DATE : 10/29/2025

REVISIONS

SDPBC HOPE CENTENNIAL ELEMENTARY

WEST PALM BEACH, FLORIDA
FOR: SCHOOL DISTRICT OF PALM BEACH COUNTY

STORMWATER POLLUTION PREVENTION DETAILS

MILLER LEGG
South Florida Office: 13580 NW 5th Street, Suite 200
Sunrise, FL 33325
954-436-7000
www.millerlegg.com

CERTIFICATE OF AUTHORIZATION: LB6680

DES	DRWN	CHK

PROJECT / FILE NO. 24-00182
DRAWING NO. C5.1
DATE DRAWN: 11/19/24

BCS Received 01/20/2026 ID 31952

V:\PROJECTS\2024\24-00182 - SDPBC HOPE CENTENNIAL\DRAWINGS\24-00182_SWPP.DWG by CVAZQUEZ 7/9/2025 8:56:04 AM

Hope Centennial ES P# 0012-2402

THE SCHOOL DISTRICT PALM BEACH COUNTY

Building Code Services

THIS DOCUMENT WAS REVIEWED FOR COMPLIANCE WITH ALL STATUTES, CODES, AND STANDARDS APPLICABLE TO PALM BEACH COUNTY SCHOOL DISTRICT FACILITIES.

THERE MAY BE ADDITIONAL CODE OR DISTRICT REQUIREMENTS NOT SHOWN ON THE PLANS. PLAN REVIEW DOES NOT RELIEVE THE BUILDER OR DESIGN PROFESSIONAL OF RECORD FROM FULL COMPLIANCE WITH ALL DISTRICT REQUIREMENTS AND APPLICABLE CODES.

BY: Rômulo Silva 01/20/2026

BCS Received 01/20/2026 ID 31952